TAD & Associates, Inc.

heat tracing specialists

Heat Tracing Products

www.tad-associates.com

Table of Contents

CONSTANT WATTAGE

FEP 3
FEP-LT 5
FEP-M 7
FEP-LV 9
SM-C 11

SELF-REGULATING

TSL 13
TSLm 15
TSLh 17
RG 19
FLV 21
SM-B 23

MINERAL INSULATED

MISS-KN 25
MISS-K/B 27

CONTROLS

115 Series 29
A419 31
TD-1 33
121 Series 35
MasterTrace 37
MS2102 41
DPNL 43
RSD4.5 45
AIC4 46
T1441/1441X 47

CONNECTION KITS

R Series 48
PL/TML 50
RGPK/SCK-2 52
Roof & Gutter Accessories 54
Splice Kits 55
Tapes 56
Accessories 57
End Termination 58

HEAT TRANSFER MASTIC

HTM 59
Quick Trace 61

TAD & ASSOCIATES, INC. heat tracing specialists

Made in USA

FEP

CONSTANT WATTAGE HEATER CABLE

Heat Trace

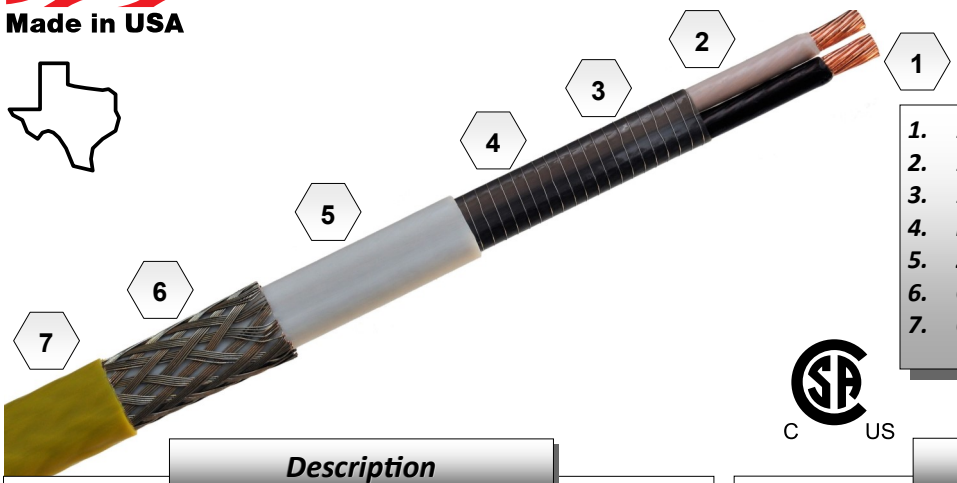

1. 12 AWG Buss Wires
2. 10 mils Insulation
3. 10 mils Insulation
4. Resistance Wire
5. 22 mils Insulation
6. Ground Braid
7. Optional 15 mil Overjacket

C US

Description

FEP constant wattage heater cables are parallel-resistance electric heaters that provide constant power output along the entire length of cable. FEP constant wattage heater cables are constructed of 12 AWG bright copper buss wires which allow for long circuit lengths and support maintenance temperatures up to 200°F. The fluoropolymer dielectric protects the cable from exposure temperatures up to 400°F when de-energized. This is suitable for process pipes that are periodically steam purged (150PSIG).

FEP heater cables are perfectly safe in wet areas and provide excellent protection from impact and abrasion. The ground braid provides essential grounding protection and the optional fluoropolymer overjacket protects the braid in heavily corrosive environments from organic and inorganic compounds. FEP heater cables can be custom tailored to meet specific customer needs including, flexible power outputs up to 15 W/Ft., flexible service voltages up to 500V and broad choice in colors for identification or aesthetic purposes.

Unlike self-regulating heater cables, FEP cables are not limited to predetermined voltages and do not exhibit inrush. FEP cables typically last up to 4X as long as self-regulating heater cables and come with a standard 10 year warranty. FEP heater cables can be cut to length in the field using standard electrical tools and should not be overlapped.

Applications

FEP constant wattage heater cables are ideally suited for all freeze protection and low to mid temperature process maintenance applications where the flow of fluid is essential. In areas requiring electric tracing such as: pipelines carrying chemicals, lubricants, food process, potable water, fire prevention systems and de-icing of roofs and downspouts. FEP cables are also an ideal solution for frost heave prevention systems and cryogenic systems such as LNG and ammonia storage. FEP heater cables will provide the exact amount of protection necessary for your application requirements.

Approvals

CSA:

Ordinary locations 2(B, E) 3C

Hazardous locations

Class 1 Div. 2 (Groups A, B, C, D)

Class 2 Div. 2 (Groups E, F, G)

Class 3 Div. 2

UL Standard 515

UL Standard 1673

C US

Note: For heater cable applications refer to National Electric Code Article 427 Fixed electric heating for pipelines and vessels.

TAD & Associates, Inc.
P.O. Box 2170
Canyon Lake, Texas 78133

Phone: 830.964.4435
Fax: 830.964.4441
http://www.tad-associates.com

Ordering Information

Example Configuration		FEP 9-277 TC		
FEP	Wattage	Voltage	Braid/Jacket	Weight/1,000'
	1-15	1=120V	TC=Tinned Copper	80 Lbs.
		2=240V	NP=Nickel Plated Copper	79 Lbs.
T Rating	T-3	4=480V	SS=Stainless Steel	80 Lbs.
			TCOJ=Fluoropolymer Jacket	90 Lbs.

Note: For other voltages not listed above (i.e. 208, 220, 277) please specify full voltage when ordering. Maximum permissible watt density, 15 W/Ft.

Output at Alternate Voltages

Typical Heaters	110 VAC	120 VAC	208 VAC	240 VAC	277 VAC
FEP 4-1	3.3	4.0	12.0	16.0	—
FEP 6-1	5.0	6.0	18.0	—	—
FEP 9-1	7.5	9.0	—	—	—
FEP 10-2	2.1	2.5	7.5	10.0	13.3
FEP 15-2	3.1	3.8	11.3	15.0	20.0

Note: Dashed lined indicates cable failure imminent.

*To minimize the danger of fire from sustained electrical arcing if the heating cable is damaged or improperly installed, and to comply with **National Electric Code (NEC) Article 427.22** requirements, agency certifications, and local codes, ground-fault equipment protection must be used on each heating cable branch circuit. Arcing may not be stopped by conventional circuit protection. Ground fault protection is the responsibility of the end user and should be installed by a certified electrician.*

Accessories

PL-1	Power Connection Kit
EC-1CW	End Termination Kit
ESK-12	Inline Splice Kit
TSK-12	Tee Splice Kit
AL-1	Aluminum Tape
FG-1	Fiberglass Tape
TD-1	Snap Action Thermostat
TF115	Ambient Sensing Thermostat
TRF115	Line Sensing Thermostat

Note: Not all accessories are listed. See catalog for additional listings.

Maximum Circuit Length

Sample Heaters	0 Ft.	50 Ft.	100 Ft.	150 Ft.	200 Ft.	250 Ft.	300 Ft.	400 Ft.	500 Ft.
FEP 3-1	3.0	2.99	2.98	2.94	2.90	2.85	2.79	2.64	2.46
FEP 5-1	5.0	4.98	4.93	4.84	4.73	4.59	4.42	4.04	3.62
FEP 3-2	3.0	3.0	3.0	2.99	2.98	2.96	2.95	2.90	2.85
FEP 8-2	8.0	7.99	7.96	7.90	7.83	7.73	7.63	7.35	7.03
FEP 15-2	15.0	14.96	14.84	14.65	14.39	14.08	13.68	—	—
FEP 4-277	4.0	3.99	3.99	3.98	3.96	3.95	3.92	3.87	3.80
FEP 8-277	8.0	7.98	7.96	7.92	7.86	7.79	7.71	7.50	7.25

Note: Dashed line indicates drop off exceeds output minimums or amperage exceeds conductor limitations.

TAD & Associates, Inc. P.O. Box 2170 Canyon Lake, TX 78133 800-755-7602

TAD & ASSOCIATES, INC. heat tracing specialists

Made in USA

FEP-LT

CONSTANT WATTAGE HEATER CABLE

Heat Trace

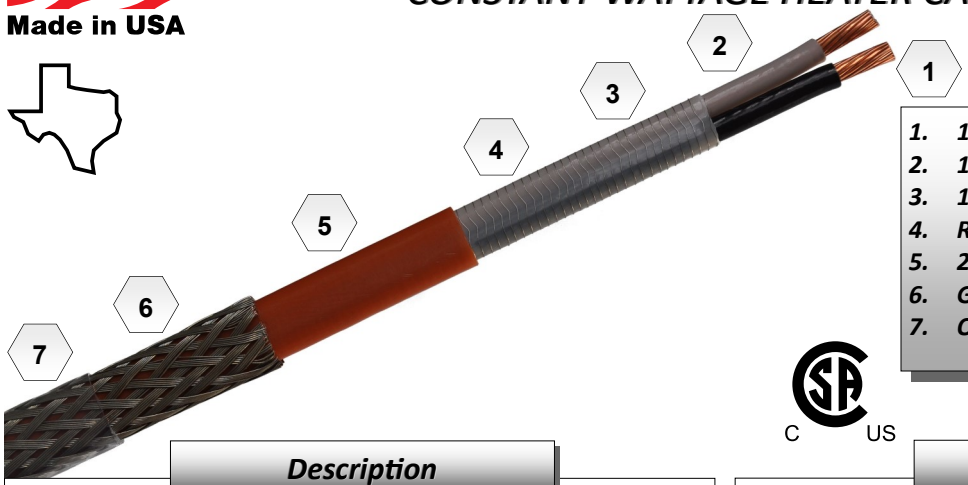

1. 14 AWG Buss Wires
2. 10 mils Insulation
3. 10 mils Insulation
4. Resistance Wire
5. 22 mils Insulation
6. Ground Braid
7. Optional 15 mil Overjacket

C US

Description

FEP-LT constant wattage heater cables are parallel-resistance electric heaters that provide constant power output along the entire length of cable. FEP-LT constant wattage heater cables are constructed of 14 AWG bright copper buss wires which allow for long circuit lengths and support maintenance temperatures up to 150°F. The fluoropolymer dielectric protects the cable from exposure temperatures up to 400°F when de-energized. This is suitable for process lines that are periodically steam purged (150 PSIG).

FEP-LT heater cables are perfectly safe in wet areas and provide excellent protection from impact and abrasion. The ground braid provides essential grounding protection and the optional fluoropolymer overjacket protects the braid in heavily corrosive environments from organic and inorganic compounds. FEP-LT heater cables can be custom tailored to meet specific customer needs including, flexible power outputs up to 7 W/Ft., flexible service voltages up to 277V and broad choice in colors for identification or aesthetic purposes.

Unlike self-regulating heater cables, FEP-LT cables are not limited to predetermined voltages and do not exhibit inrush. FEP-LT cables typically last up to 4X as long as self-regulating heater cables and come with a standard 10 year warranty. FEP-LT heater cables can be cut to length in the field using standard electrical tools and should not be overlapped.

Applications

FEP-LT constant wattage heater cables are excellent for all types of low-process temperature and freeze protection applications. FEP-LT heater cables can be used in a wide variety of applications including frost heave prevention, de-icing of freezer doors, condensation drain lines, roof and gutter de-icing, snow-melting and radiant heating of floors. FEP-LT heater cables can also be used in domestic hot water applications. FEP-LT heater cables provide outstanding mechanical properties, ease of in-field fabrication and complete freeze protection at an affordable price.

Approvals

CSA:

Ordinary locations 2(B, E) 3C

Hazardous locations

Class 1 Div. 2 (Groups A, B, C, D)

Class 2 Div. 2 (Groups E, F, G)

Class 3 Div. 2

UL Standard 515

UL Standard 1673

C US

Note: For heater cable applications refer to National Electric Code Article 427 Fixed electric heating for pipelines and vessels.

TAD & Associates, Inc.
P.O. Box 2170
Canyon Lake, Texas 78133

Phone: 830.964.4435
Fax: 830.964.4441
http://www.tad-associates.com

Ordering Information

Example Configuration		FEP-LT 6-208 TCOJ		
FEP-LT	Wattage	Voltage	Braid/Jacket	Weight/1,000'
	1-15	1=120V	TC=Tinned Copper	80 Lbs.
		2=240V	NP=Nickel Plated Copper	79 Lbs.
T Rating	T-3	4=480V	SS=Stainless Steel	80 Lbs.
			TCOJ=Fluoropolymer Jacket	90 Lbs.

Note: For other voltages not listed above (i.e. 208, 220, 277) please specify full voltage when ordering. Maximum permissible watt density, 7 W/Ft.

Output at Alternate Voltages

Typical Heaters	110 VAC	120 VAC	208 VAC	240 VAC	277 VAC
FEP-LT 4-1	3.3	4.0	—	—	—
FEP-LT 6-1	5.0	6.0	—	—	—
FEP-LT 7-1	5.8	7.0	—	—	—
FEP-LT 4-2	—	—	3.0	4.0	5.3
FEP-LT 6-2	—	—	4.5	6.0	8.0
FEP-LT 7-2	—	—	5.2	7.0	9.3

Note: Dashed lined indicates cable failure imminent or no appreciable output.

*To minimize the danger of fire from sustained electrical arcing if the heating cable is damaged or improperly installed, and to comply with **National Electric Code (NEC) Article 427.22** requirements, agency certifications, and local codes, ground-fault equipment protection must be used on each heating cable branch circuit. Arcing may not be stopped by conventional circuit protection. Ground fault protection is the responsibility of the end user and should be installed by a certified electrician.*

Accessories

PL-1	Power Connection Kit
EC-1CW	End Termination Kit
ESK-CW	Inline Splice Kit
TSK-CW	Tee Splice Kit
AL-1	Aluminum Tape
FG-1	Fiberglass Tape
TD-1	Snap Action Thermostat
TF115	Ambient Sensing Thermostat
TRF115	Line Sensing Thermostat

Note: Not all accessories are listed. See catalog for additional listings.

Maximum Circuit Length

Sample Heaters	0 Ft.	50 Ft.	100 Ft.	150 Ft.	200 Ft.	250 Ft.	300 Ft.	400 Ft.	500 Ft.
FEP-LT 4-1	4.0	3.98	3.93	3.86	3.75	3.62	3.47	3.13	—
FEP-LT 6-1	6.0	5.96	5.85	5.68	5.45	5.17	4.87	—	—
FEP-LT 8-1	8.0	7.93	7.74	7.44	7.04	—	—	—	—
FEP-LT 3-2	3.0	3.00	2.99	2.98	2.96	2.94	2.92	2.86	2.78
FEP-LT 6-2	6.0	5.99	5.96	5.92	5.78	5.68	5.58	5.45	5.18
FEP-LT 4-277	4.0	3.99	3.98	3.97	3.95	3.92	3.89	3.81	3.71
FEP-LT 8-277	8.0	7.98	7.94	7.88	7.80	7.69	7.57	7.26	6.90

Note: Dashed line indicates drop off exceeds output minimums or amperage exceeds conductor limitations.

TAD & ASSOCIATES, INC. heat tracing specialists

FEP-M

CONSTANT WATTAGE HEATER CABLE

Made in USA

Heat Trace

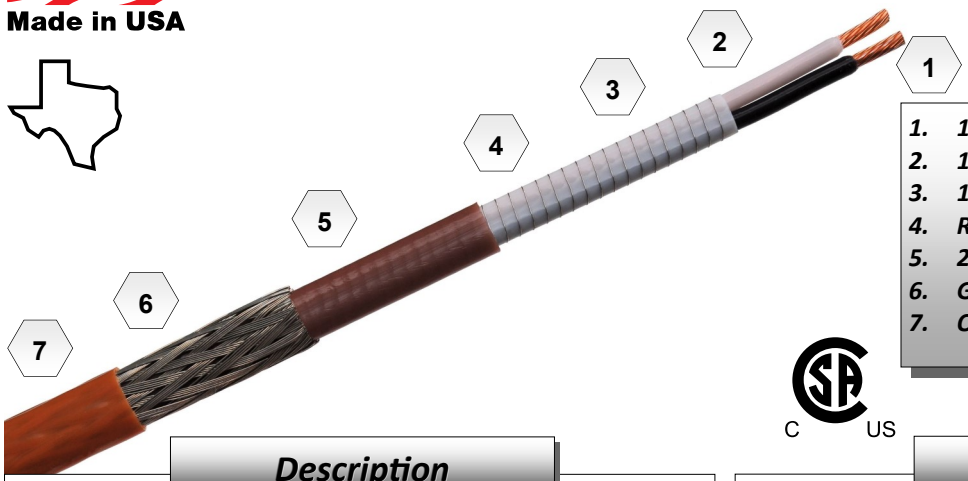

1. 16 AWG Buss Wires
2. 10 mils Insulation
3. 10 mils Insulation
4. Resistance Wire
5. 22 mils Insulation
6. Ground Braid
7. Optional 15 mil Overjacket

C US

Description

FEP-M constant wattage heater cables are parallel-resistance electric heaters that provide constant power output along the entire length of cable. FEP-M constant wattage heater cables are constructed of 16 AWG bright copper buss wires which allow for long circuit lengths and support maintenance temperatures up to 150°F. The fluoropolymer dielectric protects the cable from exposure temperatures up to 400°F when de-energized. This is suitable for process lines that are periodically steam purged (150 PSIG).

FEP-M heater cables are perfectly safe in wet areas and provide excellent protection from impact and abrasion. The ground braid provides essential grounding protection and the optional fluoropolymer overjacket protects the braid in heavily corrosive environments from organic and inorganic compounds. FEP-M heater cables can be custom tailored to meet specific customer needs including, flexible power outputs up to 7 W/Ft., flexible service voltages up to 277V and broad choice in colors for identification or aesthetic purposes.

Unlike self-regulating heater cables, FEP-M cables are not limited to predetermined voltages and do not exhibit inrush characteristics. FEP-M cables typically last up to 4X as long as self-regulating heater cables and come with a standard 10 year warranty. FEP-M heater cables can be cut to length in the field using standard electrical tools and should not be overlapped.

Applications

FEP-M constant wattage heater cables are excellent for all types of low-process temperature and freeze protection applications. FEP-M heater cables can be used in a wide variety of applications including pipe freeze protection, de-icing of freezer doors, condensate drains, radiant heating. FEP-M heater cables provide outstanding mechanical properties, ease of in-field fabrication and complete freeze protection at an affordable price.

Approvals

CSA:

Ordinary locations 2(B, E) 3C

Hazardous locations

- *Class 1 Div. 2 (Groups A, B, C, D)*
- *Class 2 Div. 2 (Groups E, F, G)*
- *Class 3 Div. 2*

UL Standard 515

UL Standard 1673

C US

Note: For heater cable applications refer to National Electric Code Article 427 Fixed electric heating for pipelines and vessels.

TAD & Associates, Inc.
P.O. Box 2170
Canyon Lake, Texas 78133

Phone: 830.964.4435
Fax: 830.964.4441
http://www.tad-associates.com

Ordering Information

Example Configuration		FEP-M 7-277 TCOJ		
FEP-M	Wattage	Voltage	Braid/Jacket	Weight/1,000'
	1-7	1=120V	TC=Tinned Copper	54 Lbs.
		2=240V	NP=Nickel Plated Copper	53 Lbs.
T Rating	T-3		SS=Stainless Steel	54 Lbs.
			TCOJ=Fluoropolymer Jacket	61 Lbs.

Note: For other voltages not listed above (i.e. 208, 220, 277) please specify full voltage when ordering. Maximum permissible watt density, 7 W/Ft.

Output at Alternate Voltages

Typical Heaters	110 VAC	120 VAC	208 VAC	240 VAC	277 VAC
FEP-M 3-1	2.52	3.00	9.01	—	—
FEP-M 5-1	4.20	5.00	—	—	—
FEP-M 7-1	5.88	7.00	—	—	—
FEP-M 3-2	—	0.75	2.25	3.00	3.99
FEP-M 5-2	—	1.25	3.76	5.00	6.67
FEP-M 7-2	—	1.75	5.25	7.00	9.32

Note: Dashed lined indicates cable failure imminent or no appreciable output.

*To minimize the danger of fire from sustained electrical arcing if the heating cable is damaged or improperly installed, and to comply with **National Electric Code (NEC) Article 427.22** requirements, agency certifications, and local codes, ground-fault equipment protection must be used on each heating cable branch circuit. Arcing may not be stopped by conventional circuit protection. Ground fault protection is the responsibility of the end user and should be installed by a certified electrician.*

Accessories

PL-1M	Power Connection Kit
EC-M	End Termination Kit
ESK-14	Inline Splice Kit
TSK-14	Tee Splice Kit
AL-1	Aluminum Tape
FG-1	Fiberglass Tape
TD-1	Snap Action Thermostat
TF115	Ambient Sensing Thermostat
TRF115	Line Sensing Thermostat

Note: Not all accessories are listed. See catalog for additional listings.

Maximum Circuit Length

Sample Heaters	0 Ft.	50 Ft.	100 Ft.	150 Ft.	200 Ft.	250 Ft.	300 Ft.	400 Ft.	500 Ft.
FEP-M 3-1	3.00	2.98	2.94	2.86	2.77	2.65	2.52	2.20	1.90
FEP-M 5-1	5.00	4.98	4.83	4.63	4.37	4.08	3.75	—	—
FEP-M 7-1	7.00	6.92	6.68	6.30	5.83	5.29	4.74	—	—
FEP-M 3-2	3.00	3.00	2.99	2.98	2.96	2.94	2.91	2.85	2.77
FEP-M 7-2	7.00	6.98	6.92	6.81	6.68	6.50	6.30	5.83	—
FEP-M 3-277	3.00	3.00	2.99	2.99	2.98	2.96	2.95	2.91	2.86
FEP-M 7-277	7.00	6.95	6.95	6.88	6.79	6.68	6.55	6.23	5.85

Note: Dashed line indicates drop off exceeds output minimums or amperage exceeds conductor limitations.

TAD & Associates, Inc. P.O. Box 2170 Canyon Lake, TX 78133 800-755-7602

TAD & ASSOCIATES, INC. heat tracing specialists

FEP-LV

LOW VOLT CONSTANT WATTAGE

Made in USA

Heat Trace

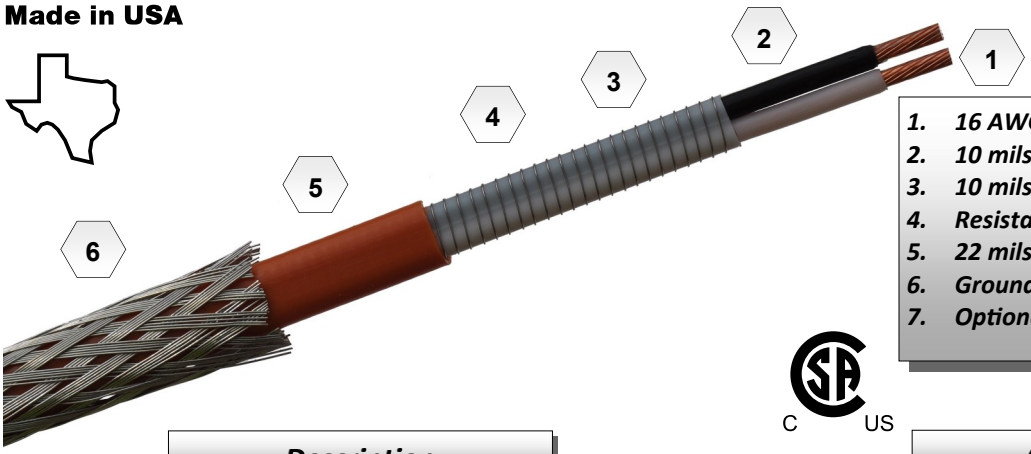

1. 16 AWG Buss Wires
2. 10 mils Insulation
3. 10 mils Insulation
4. Resistance Wire
5. 22 mils Insulation
6. Ground Braid
7. Optional 15 mil Overjacket

C US

Description

FEP-LV low volt constant wattage heater cables are parallel-resistance electric heaters that provide constant power output along the entire length of cable using 12V or 24V power. FEP-LV low volt cables are the only choice for mobile operations or where regular line voltages are unavailable in rural settings such as shale plays. FEP-LV is constructed of 16 AWG bright copper buss wires which offer exceptional flexibility and small surface area for confined spaces while supporting maintenance temperatures up to 150°F. The fluoropolymer dielectric can withstand exposure temperatures up to 400°F while de-energized and is perfectly safe in wet areas and provides excellent protection from impact, abrasion and UV. The ground braid facilitates grounding & provides mechanical protection. An optional overjacket further protects the braid in heavily corrosive environments against organic/inorganic compounds. And like all constant wattage type heating cables, FEP-LV cables are immune to inrush current & last up to 4X as long as self-regulating cables offering a much greater return-on-investment. FEP-LV low volt heater cables can be cut to length in the field using standard electrical tools and are approved for use in ordinary & Class 1 Division 2 hazardous locations.

Applications

FEP-LV low volt heater cables are ideally suited for freeze protection and some mild process temperature applications. Common applications are pipelines, natural gas & oil well-sites, automation & control instrumentation, skid units, de-icing of remote radio/telecomm & meteorological instrumentation, mobile fluid transport & much more!

Approvals

CSA:
Ordinary locations 2(B, E) 3C
Hazardous locations
Class 1 Div. 2 (Groups A, B, C, D)
Class 2 Div. 2 (Groups E, F, G)
Class 3 Div. 2
UL Standard 515
UL Standard 1673

C US

Note: For heater cable applications refer to National Electric Code Article 427 Fixed electric heating for pipelines and vessels.

TAD & Associates, Inc.
P.O. Box 2170
Canyon Lake, Texas 78133

Phone: 830.964.4435
Fax: 830.964.4441
http://www.tad-associates.com

Ordering Information

Example Configuration		FEP-LV 5-1 TC		
FEP-LV	Watts/Foot	Voltage	Braid/Jacket	Weight/1,000'
	3,5,7	1=12V	TC=Tinned Copper	40 Lbs.
		2=24V	NP=Nickel Plated Copper	42 Lbs.
T Rating	T-3		TCOJ=Fluoropolymer Jacket	50 Lbs.

Note: AC or DC voltages are permissible depending on power source. Custom outputs available upon review/approval. 500 Ft. minimum order.

Output at Alternate Voltages

Typical Heaters	12VDC	24VDC
FEP-LV 3-1	3.0	12.0
FEP-LV 3-2	0.75	3.0
FEP-LV 5-1	5.0	—
FEP-LV 5-2	1.25	5.0
FEP-LV 7-1	2.1	—
FEP-LV 7-2	1.75	7.0

Note: Dashed lined indicates cable failure imminent or no appreciable output.

Accessories

PL-1M	Power Connection Kit
EC-M	End Termination Kit
ESK-14	Inline Splice Kit
TSK-14	Tee Splice Kit
AL-1	Aluminum Tape
FG-1	Fiberglass Tape

Note: Not all accessories are listed. See catalog for additional listings.

Maximum Circuit Length

Sample Heaters	0 Ft.	5 Ft.	10 Ft.	15 Ft.	20 Ft.	25 Ft.	30 Ft.	35 Ft.	40 Ft.
FEP-LV 3-1	3.0	2.95	2.84	2.66	2.45	2.21	1.96	—	—
FEP-LV 3-2	3.0	2.99	2.96	2.91	2.84	2.78	2.67	2.57	2.46
FEP-LV 5-1	5.0	4.98	4.65	4.19	3.65	—	—	—	—
FEP-LV 5-2	5.0	4.96	4.87	4.75	4.60	4.37	4.16	3.89	3.60
FEP-LV 7-1	7.0	6.76	6.16	5.36	4.48	—	—	—	—
FEP-LV 7-2	7.0	6.94	6.78	6.53	6.20	5.11	5.4	4.96	4.52

Note: Dashed line indicates drop off exceeds output minimums or amperage exceeds conductor limitations.

TAD & Associates, Inc. P.O. Box 2170 Canyon Lake, TX 78133 800-755-7602

TAD & ASSOCIATES, INC. heat tracing specialists

SM-C

SNOW MELTING CABLE

Made in USA

Heat Trace

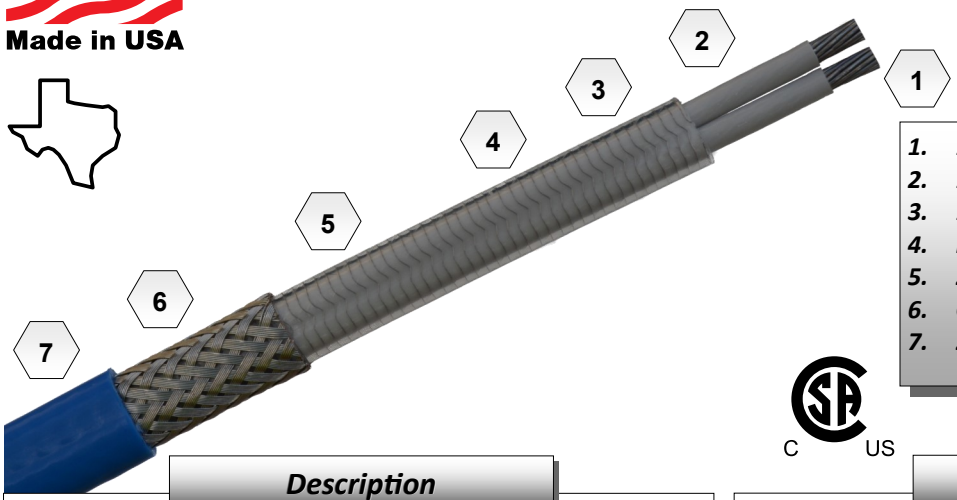

1. 12 AWG Buss Wires
2. 10 mils Insulation
3. 10 mils Insulation
4. Resistance Wire
5. 22 mils Insulation
6. Ground Braid
7. 27 mils Overjacket

C US

Description

SM-C snow melting cable is a constant wattage, parallel-resistance electric heater that provides constant power output along the entire length of cable. SM-C snow melting cable is constructed of 12 AWG bright copper buss wires which allow for exceptionally long circuit lengths. The fluoropolymer insulation protects the cable from high exposure temperatures which makes it ideal for all asphalt installations. It also sufficiently protects the cable during installation and when encapsulated in concrete/asphalt.

Unlike other snow melting brands on the market that use low temperature PVC for insulation SM-C cables offer extreme durability, ruggedness, and withstands the harshest conditions. SM-C cables offers mineral insulated type longevity for less than leading brand snow melting mats. The quality of SM-C cable is unparalleled and offers much more than typical mats. SM-C cables conform to any type area to be traced. Simply spool off cable, attach to mesh and terminate. No need for distributors to stock or order 15-20 different mat sizes.

SM-C cables generate 45W/Ft.² on 8" centers and can be spaced as far apart as 10" for an efficient radiating pattern that eliminates ice-ridging or striping of un-melted snow/ice. SM-C cables can be paired with any number of mechanical, electronic snow melting controls for an energy efficient, reliable system.

Applications

SM-C snow melting cables can be used in all direct burial concrete applications where cable is 1-1/2"-2" below grade. SM-C cable is ideally suited for all asphalt installations where high exposure temperature is a concern. Most mat heaters, snow melting cables cannot withstand asphalt application temperatures which result in cable destruction or degraded system performance due to weakened dielectic. This is because other manufacturers use low cost insulating materials in their construction. SM-C cables can be used in all classes of snow melting!

Approvals

CSA:
Ordinary locations 2(B, E) 3C
UL Standard 515
UL Standard 1673

C US

Note: For heater cable applications refer to National Electric Code Article 426.
All heat trace must be wired to an approved ground fault device.

TAD & Associates, Inc.
P.O. Box 2170
Canyon Lake, Texas 78133

Phone: 830.964.4435
Fax: 830.964.4441
http://www.tad-associates.com

Ordering Information

Example Configuration		SM-24C	
SM-C	Voltage		Weight/Lbs.
	12=120V	27=277V	500'=55
	28=208V	37=347V	1,000'=110
	22=220V	48=480V	1,500'=165
	24=240V		

Note: Standard put-ups 500', 1,000', 1,500'. 120-347V/30" zones. 480V/48" zones. Min. order 500'.

Output at Alternate Voltages

Typical Heaters	208 VAC	240 VAC	277 VAC
SM-28C	30.0	39.9	—
SM-24C	22.5	30.0	39.9
SM-27C	16.9	22.5	30.0

Note: Dashed lined indicates cable failure imminent. Outputs above 30W/Ft. not recommended as will gradually lead to diminished performance/cable failure.

Circuit Length Vs. Breaker Sizing

Voltage	Table 4 **SM-C Circuit Lengths vs. Breaker Sizing (P)**				
	15A (30)	20A (29)	30A (28)	40A (26)	50A (24)
208VAC	**80**	**110**	**170**	**230**	**300**
240VAC	**95**	**130**	**195**	**270**	**350**
277VAC	**110**	**150**	**230**	**310**	**400**

Note: P=Heating cable output at the end-of-circuit. Determine spacing with these outputs. Circuit lengths are based on 20% breaker de-rating per National Electric Code.

*To minimize the danger of fire from sustained electrical arcing if the heating cable is damaged or improperly installed, and to comply with **National Electric Code (NEC) Article 427.22** requirements, agency certifications, and local codes, ground-fault equipment protection must be used on each heating cable branch circuit. Arcing may not be stopped by conventional circuit protection. Ground fault protection is the responsibility of the end user and should be installed by a certified electrician.*

Accessories

SMC-TK	Termination Kit for SM-C
SMC-SK	Splice Kit for SM-C
CT-1	Cable Ties (50/Pack)
RPC-SM	Power Connection Kit for SM
RTC-SM	Multi-Entry Kit for SM
AIC-4	Snow Melting Control 10A
RSD4.5	Snow Melting Control 35A

Note: Not all accessories are listed. See catalog for additional listings.

Maximum Circuit Length

Heaters	0 Ft.	50 Ft.	100 Ft.	150 Ft.	200 Ft.	250 Ft.	300 Ft.	350 Ft.	400 Ft.	500 Ft.	600 Ft.	650 Ft.
SM-12C	30.0	29.35	27.59	25.00	—	—	—	—	—	—	—	—
SM-28C	30.0	29.82	29.20	28.21	26.92	25.39	23.69	—	—	—	—	—
SM-22C	30.0	29.79	29.23	28.35	27.18	25.79	24.22	—	—	—	—	—
SM-24C	30.0	29.83	29.37	28.62	27.62	26.41	25.04	23.55	—	—	—	—
SM-27C	30.0	29.88	29.55	28.95	28.18	27.24	26.15	24.95	23.66	—	—	—
SM-37C	30.0	29.92	29.69	29.32	28.82	28.19	27.46	26.62	25.72	23.69	—	—
SM-48C	30.0	29.97	29.89	29.78	29.61	29.34	29.13	28.82	28.48	27.68	26.75	26.24

Note: Circuit lengths based on 50A breaker with 20% de-rating. Dashed line indicates drop off exceeds output minimums or amperage exceeds breaker safety envelope. To determine circuit lengths using smaller breaker sizes interpolate from chart and de-rate breaker by 20%.

TAD & Associates, Inc. P.O. Box 2170 Canyon Lake, TX 78133 800-755-7602

TAD & ASSOCIATES, INC. heat tracing specialists

Made in USA

TSL

LOW TEMPERATURE SELF-REGULATING

Heat Trace

1. *16 AWG Buss Wires*
2. *Conductive Core*
3. *Polyolefin Jacket*
4. *Tinned Copper Braid*
5. *Optional Overjacket*

FM

Description

TSL low temperature self-regulating heater cable regulates it's heat output throughout the entire length of the circuit in response to ambient temperature changes. The self-regulating core increases its heat output as the ambient temperature drops; and decreases its output as the temperature rises. TSL self-regulating heater cables are constructed of industrial grade materials and are approved for use in Division 1 & 2 hazardous areas. TSL heater cables can maintain temperatures up to 150°F and have an intermittent exposure temperature of 185°F when energized. The optional thermoplastic R jacket offers corrosion resistance against certain inorganic chemicals, while the fluoropolymer T jacket protects the cable from both organic and inorganic chemicals. Either jacket offers exceptional protection against impact damage, abrasion and wet environments. As with all parallel type heater cables TSL can be cut to length in the field using standard electrical tools and will not overheat or burnout when overlapped.*

Applications

*TSL self-regulating heater cables provide freeze protection and process temperature maintenance for fluid transport and storage systems. TSL self-regulating heater cables are also ideal for roof & gutter, snow-melting/de-icing, cryogenic, fire suppression, domestic hot-water and various other applications. TSL cables are also safe for use on plastic pipes up to 5 W/Ft.**

** Use of conductive media such as foil tapes and heat transfer mastic highly recommended.*

Approvals

Factory Mutual:
Ordinary locations
Hazardous locations
- *Class 1 Div. 1* & 2 (Groups B, C, D)*
- *Class 2 Div. 2 (Groups F, G)*
- *Class 3 Div. 1* & 2*

CSA:
Ordinary locations 2E, 3(A, B, C), 5(A, B)
Hazardous locations
- *Class 1 Div. 1* & 2 (Groups A, B, C, D)*
- *Class 2 Div. 1* & 2 (Groups E, F, G)*
- *Class 3 Div. 1* & 2*

UL:
Roof & Gutter
Hot Water Maintenance

Note: For heater cable applications refer to National Electric Code Article 427

TAD & Associates, Inc.
P.O. Box 2170
Canyon Lake, Texas 78133

Phone: 830.964.4435
Fax: 830.964.4441
http://www.tad-associates.com

Ordering Information

Example Configuration		TSL 8-1 R		
TSL	Wattage	Voltage	Braid/Jacket	Weight/1,000'
*HTSL	3, 5, 8, 10	1=120V	C=Tinned Copper Braid	80 Lbs.
T Rating	T-6 (3, 5, 8 W) T-5 (10 W)	2=240V	R=Rubber Jacket	100 Lbs.
			T=Fluoropolymer Jacket	90 Lbs.

* HTSL cables must be configured with a T jacket by default. Factory Mutual requires criteria form to be completed before ordering HTSL. T rating per 1999 NEC Table 500-5(d).

Accessories

PL-1SR	Power Connection Kit
EC-1SR	End Termination Kit
ESK-14	Inline Splice Kit (14AWG)
TSK-14	Tee Splice Kit (14AWG)
AL-1	Aluminum Tape
FG-1	Fiberglass Tape
TD-1	Snap Action Thermostat
TF115	Ambient Sensing Thermostat
TRF115	Line Sensing Thermostat

Note: Not all accessories are listed. See catalog for additional listings.

Thermal Output Ratings

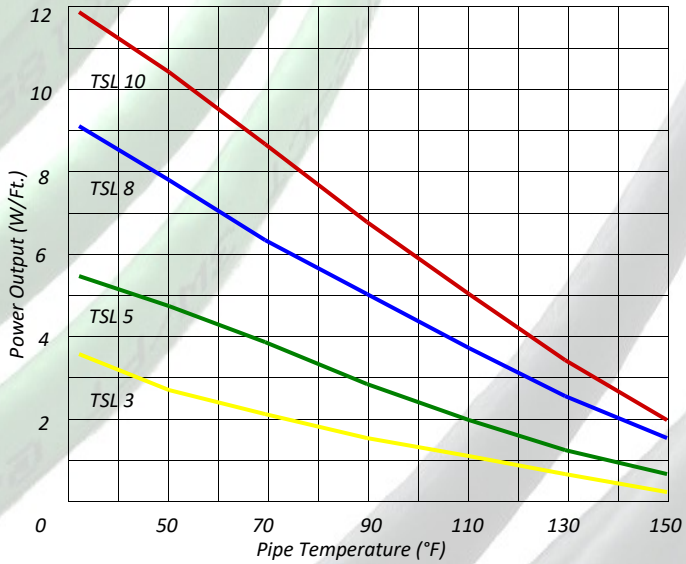

Output at Alternate Voltages

Typical Heaters	208 VAC	220 VAC	240 VAC	277 VAC
TSL 3-2	2.25	2.65	3.00	3.84
TSL 5-2	4.30	4.67	5.00	5.80
TSL 8-2	7.28	7.66	8.00	8.80
TSL 10-2	9.30	9.67	10.0	10.8

*To minimize the danger of fire from sustained electrical arcing if the heating cable is damaged or improperly installed, and to comply with **National Electric Code (NEC) Article 427.22** requirements, agency certifications, and local codes, ground-fault equipment protection must be used on each heating cable branch circuit. Arcing may not be stopped by conventional circuit protection. Ground fault protection is the responsibility of the end user and should be installed by a certified electrician.*

Maximum Circuit Length vs. Breaker Sizing

Typical Heaters	50°F Start-Up (Ft.)				0°F Start-Up (Ft.)				-20°F Start-Up (Ft.)			
	15A	20A	30A	40A	15A	20A	30A	40A	15A	20A	30A	40A
TSL 3-1	300	NR	NR	NR	200	270	330	NR	180	230	330	NR
TSL 3-2	660	NR	NR	NR	410	560	660	NR	360	480	660	NR
TSL 5-1	230	270	NR	NR	150	200	270	NR	130	175	260	270
TSL 5-2	460	540	NR	NR	300	400	540	NR	260	345	520	540
TSL 8-1	150	200	210	NR	95	125	190	210	85	100	170	210
TSL 8-2	295	390	420	NR	195	250	375	420	170	225	340	420
TSL 10-1	115	150	180	NR	70	95	145	180	60	85	120	165
TSL 10-2	230	305	360	NR	150	200	300	360	130	175	260	360

NR= Not Required. Maximum circuit length has been achieved using smaller size breaker.

TAD & Associates, Inc. P.O. Box 2170 Canyon Lake, TX 78133 800-755-7602

TAD & ASSOCIATES, INC. heat tracing specialists

Made in USA

TSLm

MEDIUM TEMPERATURE SELF-REGULATING

Heat Trace

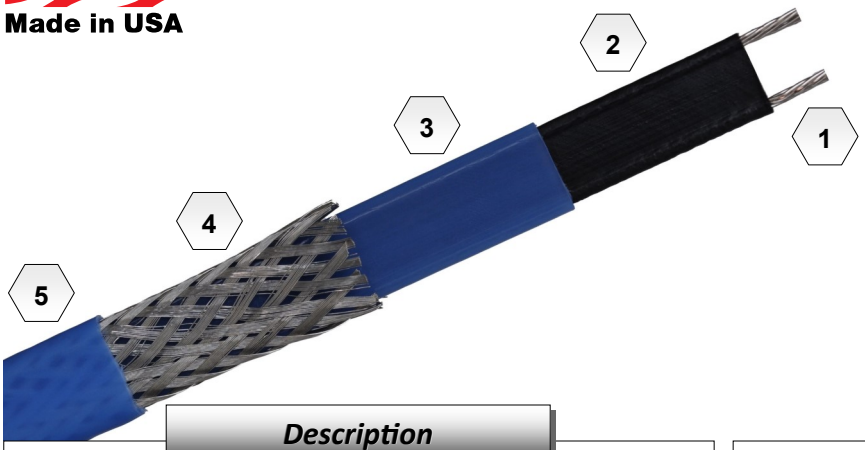

1. *16 AWG Buss Wires*
2. *Conductive Core*
3. *Fluoropolymer Jacket*
4. *Tinned Copper Braid*
5. *Optional Overjacket*

FM

Description

TSLm medium temperature self-regulating heater cable regulates it's heat output throughout the entire length of the circuit in response to ambient temperature changes. The self-regulating core increases its heat output as the ambient temperature drops; and decreases its output as the temperature rises. TSLm self-regulating heater cables are constructed of industrial grade materials and are approved for use in Division 1 & 2 hazardous areas. TSLm heater cables can maintain temperatures up to 250°F and have an intermittent exposure temperature of 366°F when energized. The optional fluoropolymer T jacket offers corrosion resistance against organic & inorganic chemicals and provides an extra layer of protection from impact & abrasion. TSLm cables can also withstand steam purging temperatures up to 150PSIG saturated on process lines. As with all parallel type heater cables, TSLm can be cut to length in the field using standard electrical tools and will not overheat or burnout when overlapped.*

Applications

TSLm self-regulating heater cables provide freeze protection and process temperature maintenance for fluid transport and storage systems. TSLm heater cables are also beneficial for use where periodic cleaning of process lines is performed and various other applications requiring high heat delivery.

Approvals

Factory Mutual:
Ordinary locations
Hazardous locations
- *Class 1 Div. 1* & 2 (Groups B, C, D)*
- *Class 2 Div. 2 (Groups F, G)*
- *Class 3 Div. 2*

CSA:
Ordinary locations 3(A, B, C), 5(A, B)
Hazardous locations
- *Class 1 Div. 1* & 2 (Groups B, C, D)*
- *Class 2 Div. 1* & 2 (Groups E, F, G)*
- *Class 3 Div. 1* & 2*

** Contact representative for more information.*
Note: For heater cable applications refer to National Electric Code Article 427 Fixed electric heating for pipelines and vessels.

TAD & Associates, Inc.
P.O. Box 2170
Canyon Lake, Texas 78133

Phone: 830.964.4435
Fax: 830.964.4441
http://www.tad-associates.com

Ordering Information

Example Configuration		TSLm 15-1 T		
TSLm	Wattage	Voltage	Braid/Jacket	Weight/1,000'
* HTSLm	5, 10, 15	1=120V	C=Tinned Copper Braid	95 Lbs.
T Rating	T-3	2=240V	T=Fluoropolymer Jacket	110 Lbs.

* HTSLm cables must be configured with a T jacket by defaut. Factory Mutual requires criteria form to be completed before ordering HTSLm. T rating per 1999 NEC Table 500 -5(d).

Accessories

PL-1SR	Power Connection Kit
EC-1SR	End Termination Kit
ESK-14	Inline Splice Kit (14AWG)
TSK-14	Tee Splice Kit (14AWG)
FG-3	Fiberglass Tape (400°F)
TF115	Ambient Sensing Thermostat
TRF115	Line Sensing Thermostat
A419	Programmable Thermostat

Note: Not all accessories are listed. See catalog for additional listings.

Thermal Output Ratings

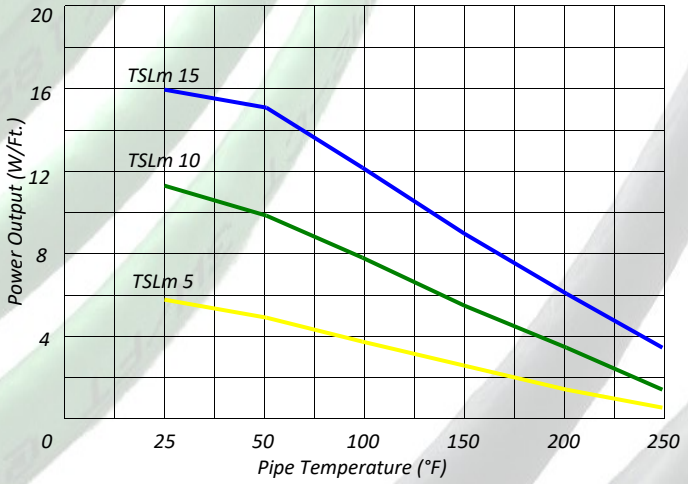

To minimize the danger of fire from sustained electrical arcing if the heating cable is damaged or improperly installed, and to comply with **National Electric Code (NEC) Article 427.22** requirements, agency certifications, and local codes, ground-fault equipment protection must be used on each heating cable branch circuit. Arcing may not be stopped by conventional circuit protection. Ground fault protection is the responsibility of the end user and should be installed by a certified electrician.

Output at Alternate Voltages

Typical Heaters	208 VAC	220 VAC	240 VAC	277 VAC
TSLm 5-2	3.90	4.43	5.00	6.25
TSLm 10-2	8.60	9.40	10.0	11.6
TSLm 15-2	13.8	14.2	15.0	16.3

Maximum Circuit Length vs. Breaker Sizing

Typical Heaters	50°F Start-Up (Ft.)				0°F Start-Up (Ft.)				-40°F Start-Up (Ft.)			
	15A	20A	30A	40A	15A	20A	30A	40A	15A	20A	30A	40A
TSLm 5-1	150	200	240	NR	135	180	220	NR	130	170	210	NR
TSLm 5-2	250	330	480	NR	230	305	440	NR	220	295	420	NR
TSLm 10-1	90	120	180	NR	85	110	165	NR	80	105	160	NR
TSLm 10-2	140	190	280	NR	130	175	260	NR	125	170	250	NR
TSLm 15-1	70	90	130	NR	65	85	125	NR	60	80	120	NR
TSLm 15-2	100	135	200	NR	95	125	185	NR	90	120	180	NR

NR= Not Required. Maximum circuit length has been achieved using smaller size breaker.

TAD & Associates, Inc. P.O. Box 2170 Canyon Lake, TX 78133 800-755-7602

TAD & ASSOCIATES, INC. heat tracing specialists

Made in USA

TSLh

HIGH TEMPERATURE SELF-REGULATING

Heat Trace

1. 16 AWG Buss Wires
2. Conductive Core
3. Fluoropolyer Jacket
4. Tinned Copper Braid
5. Optional Overjacket

FM

Description

TSLh high temperature self-regulating heater cable regulates it's heat output throughout the entire length of the circuit in response to ambient temperature changes. The self-regulating core increases its heat output as the ambient temperature drops; and decreases its output as the temperature rises. TSLh self-regulating heater cables are constructed of industrial grade materials and are approved for use in Division 1 & 2 hazardous areas. TSLh heater cables can maintain temperatures up to 375°F and have an intermittent exposure temperature of 450°F when energized. The optional fluoropolymer T jacket offers corrosion resistance against organic & inorganic chemicals and provides an extra layer of protection from impact & abrasion. TSLh heater cables can also withstand steam purging temperatures up to 190PSIG saturated on process lines. As with all parallel type heater cables, TSLh can be cut to length in the field using standard electrical tools and will not overheat or burnout when overlapped.*

Applications

TSLh self-regulating heater cables provide freeze protection and process temperature maintenance for fluid transport and storage systems. TSLh heater cables are also beneficial for use where periodic cleaning of process lines is performed and various other applications requiring high heat delivery.

Approvals

Factory Mutual:

Ordinary locations

Hazardous locations

- *Class 1 Div. 1* (Groups B, C, D)*
- *Class 1 Div. 2 (Groups A, B, C, D)*
- *Class 2 & 3 Div. 1* (Groups E, F, G)*
- *Class 2 & 3 Div. 2 (Groups F, G)*
- *Class 3 Div. 1* & 2*

CSA:

Ordinary locations 3(A, B, C), 5(A, B)

Hazardous locations

- *Class 1 Div. 1* & 2 (Groups B, C, D)*
- *Class 2 Div. 2 (Groups F, G)*

** Contact representative for more information.*

Note: For heater cable applications refer to National Electric Code Article 427 Fixed electric heating for pipelines and vessels.

TAD & Associates, Inc.
P.O. Box 2170
Canyon Lake, Texas 78133

Phone: 830.964.4435
Fax: 830.964.4441
http://www.tad-associates.com

Ordering Information

Example Configuration		TSLh 15-1 T		
TSLh	Wattage	Voltage	Braid/Jacket	Weight/1,000'
* HTSLh	5, 10, 15, 20, 25, 30	1=120V	C=Tinned Copper Braid	85 Lbs.
T Rating	T-2C	2=240V	T=Fluoropolymer Jacket	100 Lbs.
* HTSLh cables must be configured with a T jacket by default. Factory Mutual requires criteria form to be completed before ordering HTSLh. T rating per 1999 NEC Table 500-5(d).				

Accessories

PC-1SR	Power Connection Kit
EC-SR	End Termination Kit
ESK-14	Inline Splice Kit (14AWG)
TSK-14	Tee Splice Kit (14AWG)
FG-3	Fiberglass Tape (400°F)
TF115	Ambient Sensing Thermostat
TRF115	Line Sensing Thermostat
A419	Programmable Thermostat

Note: Not all accessories are listed. See catalog for additional

*To minimize the danger of fire from sustained electrical arcing if the heating cable is damaged or improperly installed, and to comply with **National Electric Code (NEC) Article 427.22** requirements, agency certifications, and local codes, ground-fault equipment protection must be used on each heating cable branch circuit. Arcing may not be stopped by conventional circuit protection. Ground fault protection is the responsibility of the end user and should be installed by a certified electrician.*

Thermal Output Ratings

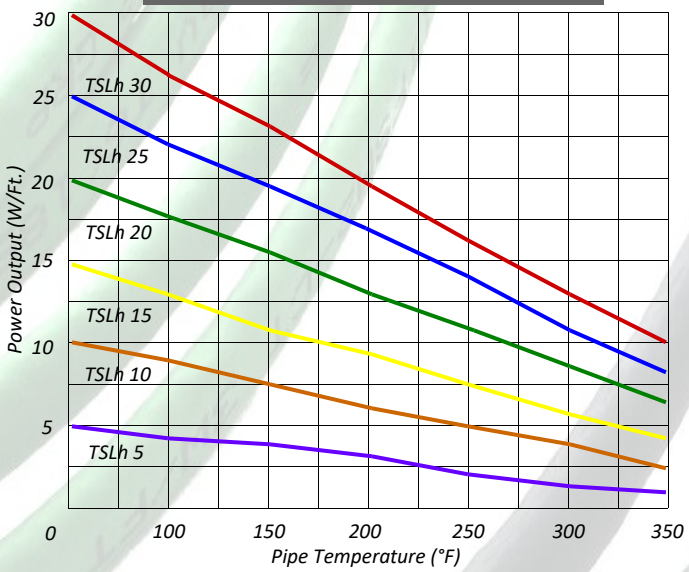

Output at Alternate Voltages

Typical Heaters	208 VAC	220 VAC	240 VAC	277 VAC
TSLh 10-2	8.80	9.30	10.0	11.4
TSLh 20-2	18.8	19.5	20.0	21.6
TSLh 25-2	24.1	24.7	25.0	26.1
TSLh 30-2	29.7	29.9	30.0	30.3

Maximum Circuit Length vs. Breaker Sizing

Typical Heaters	50°F Start-Up (Ft.)				0°F Start-Up (Ft.)				-40°F Start-Up (Ft.)			
	15A	20A	30A	40A	15A	20A	30A	40A	15A	20A	30A	40A
TSLh 5-1	180	240	335	NR	165	220	330	NR	150	200	300	NR
TSLh 5-2	360	480	540	NR	325	430	540	NR	290	385	540	NR
TSLh 10-1	120	160	180	NR	105	140	180	NR	90	120	180	NR
TSLh 10-2	240	320	360	NR	230	305	360	NR	225	300	360	NR
TSLh 15-1	80	105	135	NR	70	90	135	NR	60	80	120	NR
TSLh 15-2	160	210	270	NR	140	185	270	NR	120	160	240	NR
TSLh 20-1	60	90	120	NR	55	70	110	NR	50	65	120	NR
TSLh 20-2	115	150	230	NR	110	145	220	NR	105	140	210	NR
TSLh 25-1	45	60	85	NR	40	50	80	NR	40	50	80	NR
TSLh 25-2	90	120	170	NR	80	100	160	NR	80	100	160	NR
TSLh 30-1	40	50	70	NR	35	45	70	NR	35	45	70	NR
TSLh 30-2	80	100	140	NR	70	90	140	NR	70	90	140	NR

NR= Not Required. Maximum circuit length has been achieved using smaller size breaker.

TAD & Associates, Inc. P.O. Box 2170 Canyon Lake, TX 78133 800-755-7602

TAD & ASSOCIATES, INC. heat tracing specialists

RG

ROOF & GUTTER SELF-REGULATING

Made in USA

Heat Trace

1. *16 AWG Buss Wires*
2. *Conductive Core*
3. *Polyolefin Jacket*
4. *Tinned Copper Braid*
5. *16 mil Overjacket*

Description

RG roof & gutter self-regulating heater cable regulates it's heat output throughout the entire length of the circuit in response to ambient temperature changes. The self-regulating core increases its heat output as the ambient temperature drops; and decreases its output as the temperature rises. RG roof & gutter heating cables are constructed of industrial grade materials and are intended for use in roof & gutter and pipe tracing applications. RG cables can maintain temperatures up to 150°F and have an intermittent exposure temperature of 185°F when energized. RG heating cables come in 8W and 10W/Ft. configurations for those areas that experience heavy snowfall and require additional heating to maintain proper roof drainage. RG8 has the ability to produce 13-14 W/Ft. in snow/ice conditions while RG10 has the ability to generate 14-17 W/Ft. The standard polyolefin overjacket protects the ground braid from impact & abrasion and has built-in UV inhibitors to prevent degradation of inuslating materials from continuous sun exposure. Due to their construction, RG heating cables will outlast economy/commercial grade roof & gutter cables up to 4X as long thereby reducing replacement costs. When combined with snow melting controllers, RG heating cables can save users up to 80% on utility costs. RG self-regulating heater cables can be cut to length in the field and will not overheat or burnout when overlapped.

Applications

RG self-regulating heater cables are ideal for roof & gutter de-icing and pipe-tracing. RG heating cables also provide freeze protection for fluid transport and storage systems.

Approvals

Factory Mutual:
Ordinary locations
Hazardous locations
- *Class 1 Div. 2 (Groups B, C, D)*
- *Class 2 Div. 2 (Groups F, G)*
- *Class 3 Div. 2*

CSA:
Ordinary locations 2E, 3(A, B, C), 5(A, B)
Hazardous locations
- *Class 1 Div. 2 (Groups A, B, C, D)*
- *Class 2 Div. 2 (Groups E, F, G)*
- *Class 3 Div. 2*

UL:
Roof & Gutter

Note: For heater cable applications refer to National Electric Code Article 427 Fixed electric heating for pipelines and vessels.

TAD & Associates, Inc.
P.O. Box 2170
Canyon Lake, Texas 78133

Phone: 830.964.4435
Fax: 830.964.4441
http://www.tad-associates.com

Ordering Information

Example Configuration		RG81		
RG	Wattage	Voltage	Braid/Jacket	Weight/1,000'
	8, 10	1=120V	R= Rubber Jacket (Std.)	100 Lbs.
T Rating	T-6 (8 W) T-5 (10 W)	2=240V	T=Fluoropolymer Jacket*	90 Lbs.
T rating per 1999 NEC Table 500-5(d). 240 for use with 208V-277V. See Output @ Alternate Voltage chart below for true output.* Optional fluoropolymer jacket available upon request.				

Accessories

RGPK	Power Connection Kit
SCK-2	Power Termination Kit
SCK-2-E	Termination Kit with End Seal
RCK-1	Roof Clips (10/Pack)
RDK-1	Downspout Hanger
RSD 4.5	Snow/Moisture Sensor 35A
AIC-4	Snow-Melting Controller 16A
TF115	Ambient Sensing Thermostat
TRF115	Line Sensing Thermostat

Note: Not all accessories are listed. See catalog for additional listings.

Thermal Output Ratings

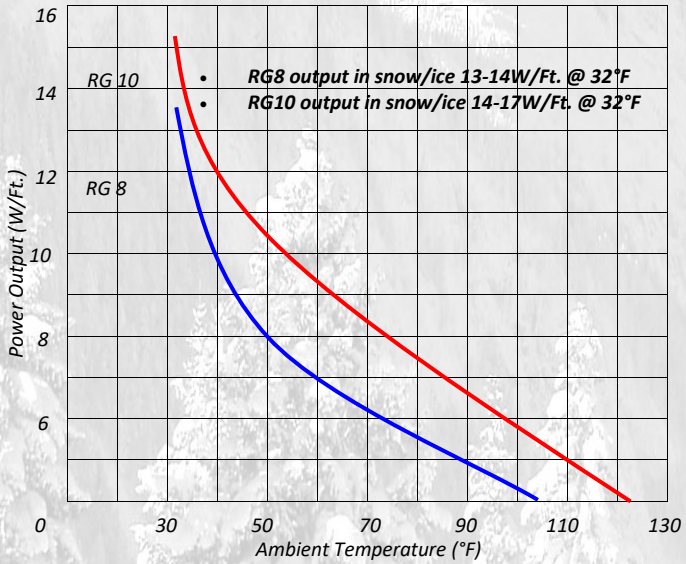

Output at Alternate Voltages

Typical Heaters	208 VAC	220 VAC	240 VAC	277 VAC
RG 82	7.28	7.66	8.00	8.80
RG 102	9.30	9.67	10.0	10.8

*To minimize the danger of fire from sustained electrical arcing if the heating cable is damaged or improperly installed, and to comply with **National Electric Code (NEC) Article 427.22** requirements, agency certifications, and local codes, ground-fault equipment protection must be used on each heating cable branch circuit. Arcing may not be stopped by conventional circuit protection. Ground fault protection is the responsibility of the end user and should be installed by a certified electrician.*

Maximum Circuit Length vs. Breaker Sizing

Typical Heaters	50°F Start-Up (Ft.)				0°F Start-Up (Ft.)				-20°F Start-Up (Ft.)			
	15A	20A	30A	40A	15A	20A	30A	40A	15A	20A	30A	40A
RG 81	150	200	210	NR	95	125	190	210	85	100	170	210
RG 82	295	390	420	NR	195	250	375	420	170	225	340	420
RG 101	115	150	180	NR	70	95	145	180	60	85	120	165
RG 102	230	305	360	NR	150	200	300	360	130	175	260	360
NR= Not Required. Maximum circuit length has been achieved using smaller size breaker.												

TAD & Associates, Inc. P.O. Box 2170 Canyon Lake, TX 78133 800-755-7602

TAD & ASSOCIATES, INC. heat tracing specialists

FLV

LOW VOLT SELF-REGULATING

Heat Trace

1. *16 AWG Buss Wires*
2. *Conductive Core*
3. *Polyolefin Jacket*
4. *Tinned Copper Braid*
5. *Standard Overjacket*

Description

FLV low voltage self-regulating heater cables are designed to operate off low voltage power sources. FLV heater cable can be used for freeze protection and low process temperature in various applications.

FLV is ATEX approved for use in class 1 division 2 areas. FLV heater cables can maintain temperatures up to 150°F and have an intermittent exposure temperature of 185°F when de-energized. The standard thermoplastic R jacket offers corrosion resistance against certain inorganic chemicals, while the fluoropolymer T jacket protects the cable from both organic and inorganic chemicals. Either jacket offers exceptional protection against impact damage, abrasion and wet environments. As with all parallel type heater cables FLV can be cut to length in the field using standard electrical tools and will not overheat or burnout when overlapped.

Applications

FLV self-regulating heater cables provide freeze protection and low temperature process for fluid transport and storage systems. FLV self-regulating heater cables are also ideal for low surface area roof & gutter, snow-melting/de-icing and various other applications where normal power requirements are inaccessible due to location.

Approvals

ATEX:

Certificates:
SIRA 12ATEX3113
SIRA 12ATEX3115

Note: For heater cable applications refer to National Electric Code Article 427 Fixed electric heating for pipelines and vessels.

TAD & Associates, Inc.
P.O. Box 2170
Canyon Lake, Texas 78133

Phone: 830.964.4435
Fax: 830.964.4441
http://www.tad-associates.com

Ordering Information

Example Configuration		FLV 5-1 R		
FLV	Wattage	Voltage	Braid/Jacket	Weight/1,000'
	3, 5, 9*	1=12VAC/VDC	R=Rubber Jacket	67 Lbs.
T Rating	T-6	2=24VAC/VDC	T=Fluoropolymer Jacket	74 Lbs.

* FLV 9 used for special applications only. For details of circuit lengths and startup currents contact TAD & Associates, Inc. T rating per 1999 NEC Table 500-5(d).

Accessories

PL-1SR	Power Connection Kit
EC-1SR	End Termination Kit
ESK-SR	Inline Splice Kit (14AWG)
TSK-SR	Tee Splice Kit (14AWG)
AL-1	Aluminum Tape
FG-1	Fiberglass Tape
TD-1	Snap Action Thermostat
TF115	Ambient Sensing Thermostat
TRF115	Line Sensing Thermostat

Note: Not all accessories are listed. See catalog for additional listings.

Thermal Output Ratings

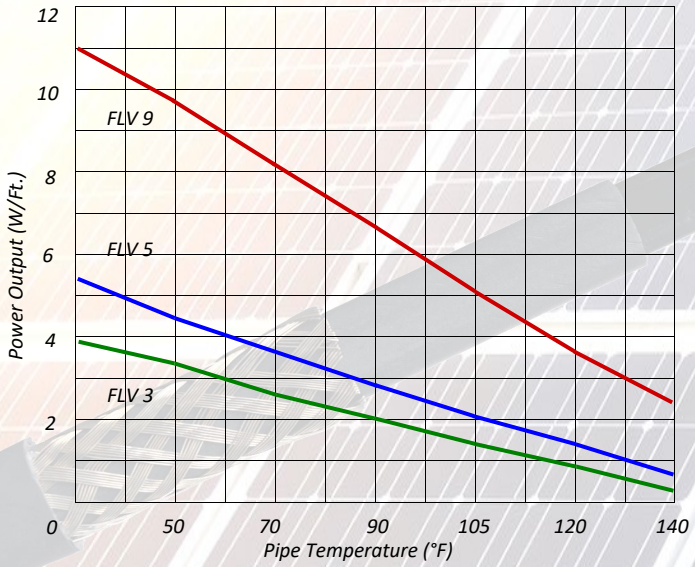

Maximum Circuit Length vs. Breaker Sizing

Typical Heaters	40°F Start-Up (Ft.)				0°F Start-Up (Ft.)				-40°F Start-Up (Ft.)			
	6A	10A	16A	20A	6A	10A	16A	20A	6A	10A	16A	20A
FLV 3-12	13	23	32	—	9	16	26	—	6	13	19	—
FLV 3-24	26	46	65	—	19	32	52	—	13	26	39	—
FLV 5-12	9	16	26	—	9	13	23	—	6	13	19	—
FLV 5-24	19	32	52	—	19	26	45	—	13	26	39	—
FLV 9-12	—	—	—	—	—	—	—	—	—	—	—	—
FLV 9-24	—	—	—	—	—	—	—	—	—	—	—	—

TAD & ASSOCIATES, INC. heat tracing specialists

SM-B

SNOMELT HEATING CABLE

Heat Trace

1. *16 AWG Buss Wires*
2. *Conductive Core*
3. *Polyolefin Jacket*
4. *Tinned Copper Braid*
5. *TPR Overjacket*

FM CE

Description

SM-B SnoMelt is a self-regulating heating cable that can be used for snow melting and ice prevention of surfaces such as concrete roads, ramps, driveways and paths. It may also be used on stairways, walkway gratings or loading docks. It can be cut-to-length in the field and exact lengths can be matched without any complicated design considerations. The power output regulates itself in response to surface temperature. SM-B cable cannot overheat and tends to reduce power when not needed. SM-B is ideally suited for most general snow and ice prevention applications and is not bound to various mat sizes. Installations can be combined with TAD & Associates' specially developed high energy efficient control systems that can apply full power for melting and a reduced lower output for ice prevention. The SnoMelt/Powermatch Micro+ controlled system can reduce operating costs by as much as 80% when compared with conventionally controlled snow melting and ice prevention systems.

Applications

SM-B is used expressly for snow-melting and de-icing applications. It can achieve a maximum surface temperature of 104°F. The minimum installation temperature for SM-B cable is –22°F.

Approvals

Factory Mutual:
Ordinary locations
Type C and D installations
Snow-Melting/De-Icing

FM

CE

The SM-B system (BPS2,BES2, BES3 and HES3)

Note: For heater cable applications refer to National Electric Code Article 427 Fixed electric heating for pipelines and vessels.

TAD & Associates, Inc.
P.O. Box 2170
Canyon Lake, Texas 78133

Phone: 830.964.4435
Fax: 830.964.4441
http://www.tad-associates.com

Ordering Information

Example Configuration		SM2-B	
SM	Voltage	Jacket (inches) +/-0.5	Weight/1,000'
	2=208V-277V	B=Rubber Jacket (.60" x .256")	127 Lbs.
	3=347V	A=Aluminum Jacket (.59" x .24")	122 Lbs.
SMA replaces braid and overjacket with extruded aluminum, offering greater mechanical protection when required. Verify with local codes for use in concrete.			

Accessories

SMB-TK	Termination Kit for SM-B
SMB-SK	Splice Kit for SM-B
CT-1	Cable Ties (50/Pack)
RPC-SM	Power Connection Kit for SM
RTC-SM	Multi-Entry Kit for SM
AIC-4	Snow Melting Control 10A
RSD4.5	Snow Melting Control 35A

Note: Not all accessories are listed. See catalog for additional listings.

Thermal Output Ratings

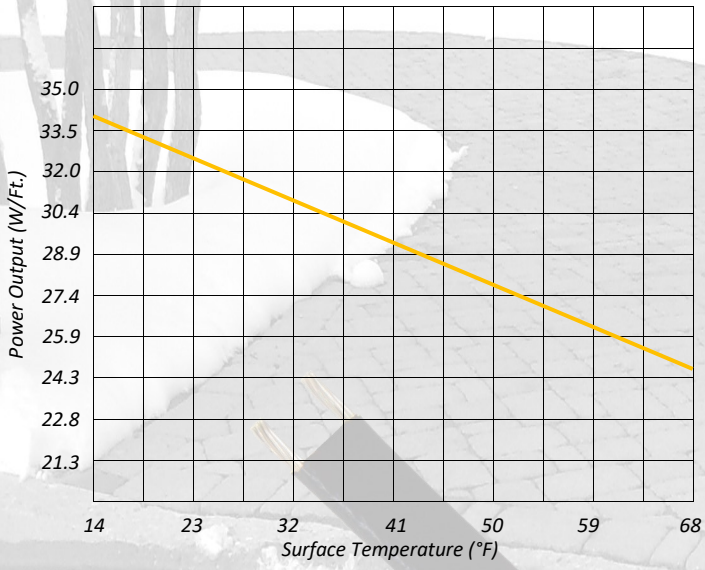

The following graph indicates the cable performance when buried in concrete. For other conditions, refer to the Factors Table shown below.

*To minimize the danger of fire from sustained electrical arcing if the heating cable is damaged or improperly installed, and to comply with **National Electric Code (NEC) Article 427.22** requirements, agency certifications, and local codes, ground-fault equipment protection must be used on each heating cable branch circuit. Arcing may not be stopped by conventional circuit protection. Ground fault protection is the responsibility of the end user and should be installed by a certified electrician.*

Output at Alternate Voltages

Typical Heaters	208 VAC	240 VAC	277 VAC
SM2-B	26.88 (88)	28.65 (94)	29.58 (97)
Note: Output changes with applied voltage. (W/m)			

Circuit Length vs. Breaker Sizing

Service Voltage	38°F (3°C) Start-Up (Ft.)			
	15A	20A	30A*	40A*
208VAC	90 (27)	120 (36)	180 (54)	240 (73)
240VAC	100 (30)	130 (39)	200 (61)	260 (79)
277VAC	110 (33)	145 (44)	220 (67)	290 (88)
Note: Breaker not to exceed 50A. * In order to achieve circuit length both cable ends MUST be powered. For single power point refer to 20A circuit length. (meters)				

Output Multiplying Factor

For Burial In:	Power Output Multiplying Factor
Sand (Wet)	W/Ft. in concrete x 0.9
Metal Conduit	W/Ft. in concrete x 0.4

TAD & ASSOCIATES, INC. heat tracing specialists

Made in USA

MISS-KN

MINERAL INSULATED HEATER CABLE

Heat Trace

1. End Termination
2. Alloy 825 Stainless Steel
3. Hot/Cold Joint
4. Compression Fitting

Description

MI heater cables are seamless die drawn cables that are made to specified lengths to deliver high power output along the entire length of the cable. It's nichrome heating conductors are embedded in highly compressed magnesium oxide dielectric and covered with a stainless Alloy 825 sheath. The sheath is fully annealed and is easily hand formable.

MI heater cables are factory assembled and cannot be cut to length in the field. Both hot and cold sections are made to customer specifications. MI cables can be completely submersed which makes them great for gut tracing applications. MI cables can also be equipped with reversed glands and puller-eyes to assist in cable installation and capping small diameter pipes. MI cables resist the most aggressively corrosive environments. MI heating cable is totally inorganic and will not deteriorate with age. All heating units are factory fabricated to a specified length and rigorously tested to IEEE standards. MISS-KN type MI cables are capable of withstanding temperatures up to 1,200°F.

Applications

MI heater cables are suitable for use in pipe tracing applications where high temperatures are required, pad heating/snow melting where removal of snow and ice are needed for safety. MI heater cables are also useful in large vessel and hopper heating applications. In tank and hopper heating applications MI is attached to sheets of wire mesh to help diffuse the heat into the tank walls. Because MI cables are silver soldered and waterproof they are a great choice in "gut" tracing applications.

Calculation

To determine which conductor in Table 2 will satisfy performance requirements follow the arithmetic below.

$$\text{Conductor } (\Omega/\text{Ft.}) = \frac{\text{Voltage}^2}{\text{Length}^2(\text{Cable W/Ft.})}$$

Compare the answer to the closest available conductor that will yield desired effect. Recalculate using formula above to determine exact output and whether the result is favorable and will not impose any safety or damage potential. No more than 4 W/Ft. is permissible on PVC and polyethylene pipe. Some design complications may arise under certain circumstances due to variables, however there are workarounds such as transformers.

TAD & Associates, Inc.
P.O. Box 2170
Canyon Lake, Texas 78133

Phone: 830.964.4435
Fax: 830.964.4441
http://www.tad-associates.com

Ordering Information

Example Configuration		MISS-KN142L-AN-100-03-C1-E				
MISS-KN	Conductor	Form	Hot Section	Cold Section	Options	Options Continued
1200°F	Table 2	AN	See Notes	.5' - 40' Exp.	C1=1/2" Reversed Gland	P=PVC Jacketed Cold Section
		BN			C2=3/4" Reversed Gland	U=NEMA 7 Termination
		CN			E=Puller-Eye End	X=Other, Specify
					G=Glass Wrapped Hot Section	

Note: Hot section length is dependent on several factors including voltage, cable output, conductor, amperage.

Construction

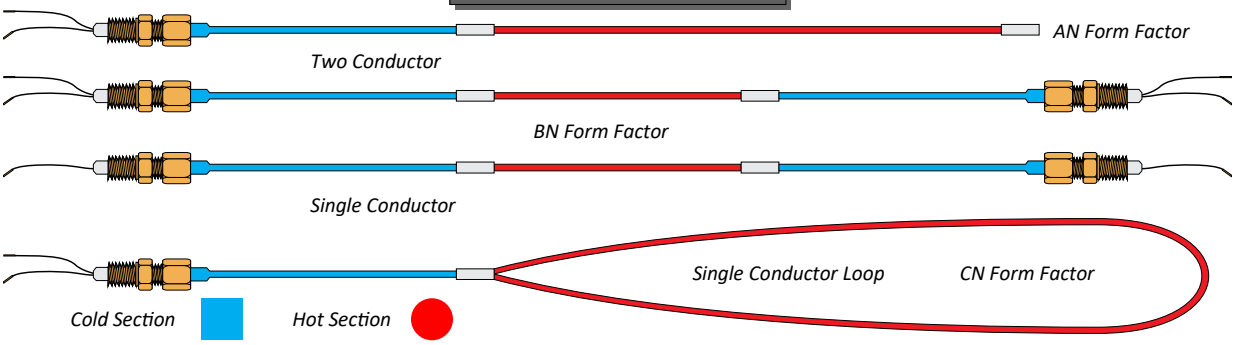

Table 2

300 Volt, 2 Conductor KNXXXL			600 Volt, 2 Conductor KNXXX			600 Volt, 1 Conductor KN		
Size	Ohms/Ft.	O.D.	Size	Ohms/Ft.	O.D.	Size	Ohms/Ft.	O.D.
32SP4458	0.0458	0.185	KN132	0.10	0.265	KN101	0.03	0.26
32SP4583	0.0583	0.184	KN142	0.15	0.245	KN111	0.04	0.24
32SP4734	0.0734	0.184	KN152	0.2	0.245	KN121	0.07	0.20
KN132L	0.10	0.180	62SQ3286	0.286	0.246	KN141	0.10	0.20
KN142L	0.15	0.160	62SQ3505	0.505	0.234	KN151	0.15	0.19
KN152L	0.2	0.146	KN182	0.7	0.265	KN161	0.20	0.19
KN162L	0.3	0.215	62ST2115	1.15	0.239	KN171	0.30	0.19
KN172L	0.5	0.196	KN222	2.0	0.245	KN191	0.50	0.18
KN182L	0.7	0.160	62SA2414	4.14	0.239	KN211	0.70	0.17
KN192L	1.0	0.196	KN252	6.0	0.215	KN221	1.0	0.17
KN222L	2.0	0.180	62SZF2900	9.0	0.215	KN241	2.0	0.16
KN242L	4.0	0.146	KN292	11.0	0.215			
KN252L	6.0	0.135						
32SF2900	9.0	0.140						
KN292L	11.0	0.130						

Note: All values @ 68°F
*Resistance curves apply, consult TAD for design

TAD & ASSOCIATES, INC. heat tracing specialists

Made in USA

MISS-K/B

MINERAL INSULATED HEATER CABLE

Heat Trace

1. End Termination
2. Alloy 825 Stainless Steel
3. Hot/Cold Joint
4. Compression Fitting

Description

MI heater cables are seamless die drawn cables that are made to specified lengths to deliver high power output along the entire length of the cable. It's nichrome heating conductors are embedded in highly compressed magnesium oxide dielectric and covered with a stainless Alloy 825 sheath. The sheath is fully annealed and is easily hand formable.

MI heater cables are factory assembled and cannot be cut to length in the field. Both hot and cold sections are made to customer specifications. MI cables can be completely submersed which makes them great for gut tracing applications. MI cables can also be equipped with reversed glands and puller-eyes to assist in cable installation and capping small diameter pipes. MI cables resist the most aggressively corrosive environments. Alloy 825 cables are capable of withstanding temperatures up to 1,000°F.

Applications

MI heater cables are suitable for use in pipe tracing applications where high temperatures are required, pad heating/snow melting where removal of snow and ice are needed for safety. MI heater cables are also useful in large vessel and hopper heating applications. In tank and hopper heating applications MI is attached to sheets of wire mesh to help diffuse the heat into the tank walls. Because MI cables are silver soldered and waterproof they are a great choice in "gut" tracing applications.

Calculation

To determine which conductor in Table 2 will satisfy performance requirements follow the arithmetic below.

$$\text{Conductor } (\Omega/\text{Ft.}) = \frac{\text{Voltage}^2}{\text{Length}^2(\text{Cable W/Ft.})}$$

Compare the answer to the closest available conductor that will yield desired effect. Recalculate using formula above to determine exact output and whether the result is favorable and will not impose any safety or damage potential. No more than 4 W/Ft. is permissible on PVC and polyethylene pipe. Some design complications may arise under certain circumstances due to variables, however there are workarounds such as transformers.

TAD & Associates, Inc.
P.O. Box 2170
Canyon Lake, Texas 78133

Phone: 830.964.4435
Fax: 830.964.4441
http://www.tad-associates.com

Ordering Information

Example Configuration		MISS-K742-AN-125-03-C1-E				
MISS	Conductor	Form	Hot Section	Cold Section	Options	Options Continued
	Table 2	AN	See Notes	.5' - 40' Exp.	C1=1/2" Reversed Gland	P=PVC Jacketed Cold Section
		BN			C2=3/4" Reversed Gland	U=NEMA 7 Termination
		CN			E=Puller-Eye End	X=Other, Specify
					G=Glass Wrapped Hot Section	

Note: Hot section length is dependent on several factors including voltage, cable output, conductor, amperage.

Construction

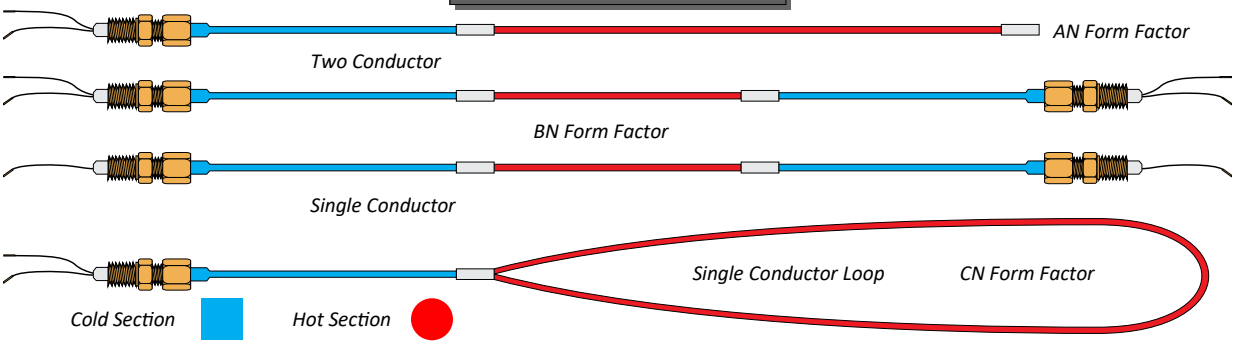

Table 2

300 Volt, 2 Conductor 3/16" OD .07 Lbs/Ft.			600 Volt, 2 Conductor 5/16" OD .22 Lbs/Ft.			600 Volt, 1 Conductor 3/16" OD .07 Lbs/Ft.		
Size	Ohms/Ft.	Max Exp Temp°F	Size	Ohms/Ft.	Max Exp Temp°F	Size	Ohms/Ft.	Max Exp Temp°F
K556	.043*	600	B588	.0071*	600	K145	.0046*	600
K658	.058*		B614	.0149*		K189	.0090*	
K674	.074*		B627	.027*		K216	.0165*	
K693	.093*		B640	.040*		K239	.039	1,000
K712	.117*		B670	.065	1,000	K250	.050	
K715	.147*		B710	.104		K279	.079	
K721	.213*		B715	.162		K310	.095	
K732	.319	1,000	B720	.205		K316	.157	
K742	.416		B732	.325		K326	.260	
K752	.520		B750	.500		K333	.330	
K766	.660		B774	.735		K346	.457	
K774	.740		B810	1.162		K372	.730	
K810	1.00		B819	1.87		K412	1.17	
K813	1.30		B830	2.97		K415	1.48	
K818	1.80		B840	4.30		K423	2.36	
K824	2.34		B859	5.98		K430	2.80	
K830	2.96					K447	4.50	
K838	3.70							
K846	4.72							
K860	5.60							
K866	6.60							
K894	9.00							
K919	18.00							

Note: All values @ 68°F
*Resistance curves apply, consult TAD for design

TAD & Associates, Inc. P.O. Box 2170 Canyon Lake, TX 78133 800-755-7602

TAD & ASSOCIATES, INC. heat tracing specialists

115 Series

NEMA 4X THERMOSTAT

Controls

Description

The TRF115 line sensing & TF115 ambient sensing thermostats are NEMA 4X temperature controls. The TRF115 is intended mainly for process applications while the TF115 for freeze protection of pipes, vessels, hoppers, instrumentation, snow-melting, roof & gutter and other types of electric heat tracing applications. Both thermostats are perfectly suitable for both industrial and commercial applications and are approved for use in ordinary locations.

Features

- *Rugged weather resistant enclosure made of corrosion resistant materials for long life.*
- *Stainless steel remote bulb (TRF115) provides rapid response to temperature change.*
- *Low mass, high surface area of stainless steel coiled sensor (TF115) provides rapid response to temperature change.*
- *Large, readily visible dial with 0°F-120°F temperature range (TRF115) and 40°F-110°F (TF115).*
- *Multi-positional mounting offers flexibility in either new or existing installations.*
- *One control for both heating and cooling applications.*

TAD & Associates, Inc.
P.O. Box 2170
Canyon Lake, Texas 78133

Phone: 830.964.4435
Fax: 830.964.4441
http://www.tad-associates.com

Installation

- *Multi-positional mounting meets new or existing wiring needs.*
- *Insulated enclosure.*
- *All mounting holes are exterior to the enclosure.*
- *Easily removable knockouts in sides and top of enclosure.*
- *Large wiring compartment with watertight cover separated from thermostat compartment.*
- *May be cord or conduit connected.*
- *Pigtail leads for rapid, positive, electrical connection.*

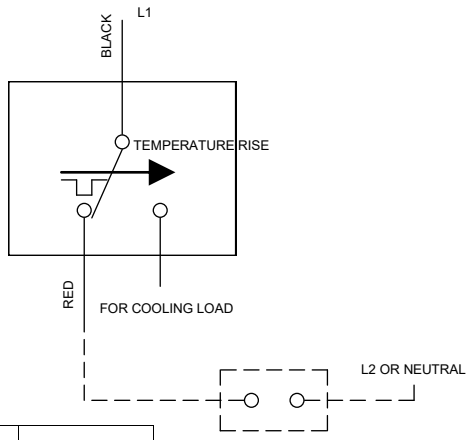

Electrical Ratings

	120VAC	208VAC	240VAC	277VAC
Full Load Amps	16.0	12.0	10.0	—
Locked Rotor Amps	80.0	60.0	50.0	—
Non-Inductive Resistive Load Amps	25.0	25.0	22.0	5.00

Specifications

Thermostat	Type	Range	Differential	Bulb Size	Capillary
TRF115	SPDT	0°F - 120°F	3°F	2 5/16" x 5/16"	5'
TF115	SPDT	40°F - 110°F	2.5°F	NA	NA

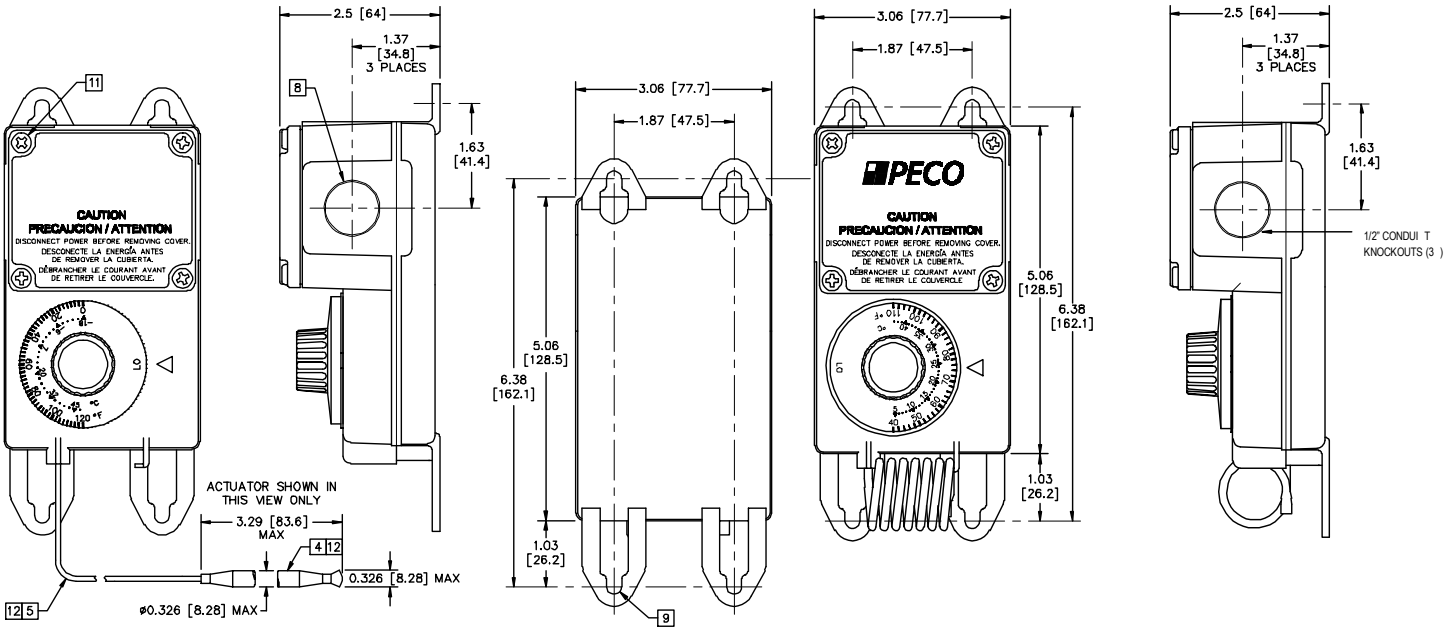

TAD & ASSOCIATES, INC. heat tracing specialists

A419

NEMA 4X ELECTRONIC THERMOSTAT

Controls

Description

The A419 electronic temperature control is a single-stage, single -pole double-throw (SPDT), electronic temperature control. The control features a lockable , three button touchpad for setup and adjustment and an LCD which displays the sensed temperature and other control functions. A front panel LED indicates the output relay status. The control has a temperature range of - 30°F to 212°F.

The A419 control has both heating and cooling modes with adjustable setpoint and differential, an adjustable anti-short cycle delay, and a temperature offset function. The control provides remote sensing capability, and electronic accuracy in a NEMA 4X watertight and corrosion resistant enclosure.

Features

- *Easy-to-read LCD displays the sensed temperature and control function status clearly and custom icons on the display indicate the control and system status at a glance.*
- *The temperature differential adjustment range allows precise (1°F or °C) temperature differential settings that are much tighter than electromechanical controls.*
- *The Adjustable Anti-Short Cycle Delay (0-12 minutes in 1-minute increments) ensures that the output relay remains off for a user-set time delay and helps avoid hard starts, nuisance overload outages, and unnecessary equipment wear.*
- *The Noryl® high-impact thermoplastic type NEMA 4X enclosures allow watertight surface mount.*
- *Lockable front-panel touchpad allows easy setup and adjustment of the A419 control setpoint, differential, and other functions; a concealed jumper locks the touchpad.*

TAD & Associates, Inc.
P.O. Box 2170
Canyon Lake, Texas 78133

Phone: 830.964.4435
Fax: 830.964.4441
http://www.tad-associates.com

Specifications

Type	Range	Differential	Sensor
SPDT	-30°F - 212°F	1°F - 30°F	6.5' PTC

Ordering Information

Example Configuration	A419	Weight
A419	NEMA 4X Digital Thermostat	1.0 Lbs
Note: Sensor is for ambient or line sensing use.		

Electrical Ratings

	120VAC	208VAC	240VAC	277VAC
Full Load Amps	16.0	9.20	8.00	6.90
Locked Rotor Amps	96.0	55.2	48.0	41.6
Non-Inductive Resistive Load Amps	15.0	10.0	10.0	8.70

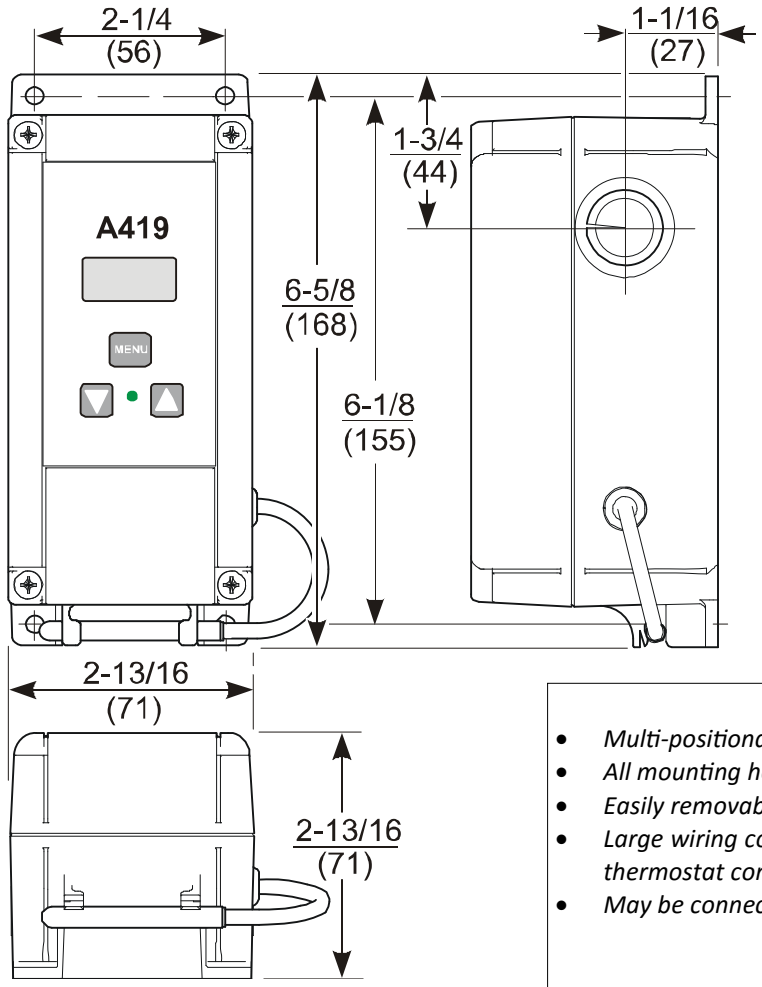

Installation

- Multi-positional mounting meets new or existing wiring needs.
- All mounting holes are exterior to the enclosure.
- Easily removable knockouts in sides and top of enclosure.
- Large wiring compartment with watertight cover separated from thermostat compartment.
- May be connected to conduits.

TAD & Associates, Inc. P.O. Box 2170 Canyon Lake, TX 78133 800-755-7602

TAD & ASSOCIATES, INC. heat tracing specialists

Made in USA

TD-1

PRESET SNAP-ACTION THERMOSTAT

Controls

Actual Size

Description

The TD-1 is a snap action style thermostat preset at 40°F that can be configured to measure surface temperature or ambient air temperature. The thermostat has two leads that break the L1 conductor on either a self-regulating or constant wattage heater cable while the neutral remains connected to the service lead in the junction box. The TD-1 is ideal for use in freeze protection applications and is intended for use with short circuit lengths not switching more than 80% of the thermostat's registered amperage.

Construction

- *SPST contact which opens on temperature rise.*
- *Bimetal disc is located at bottom of stainless steel cup for surface mount sensitivity.*
- *Epoxy seal provides weatherproof seal from -20°F to 221°F.*
- *The TD-1 provides a high quality, durable, long life temperature control preset to 40°F.*
- *Style No. 37T21 30907*

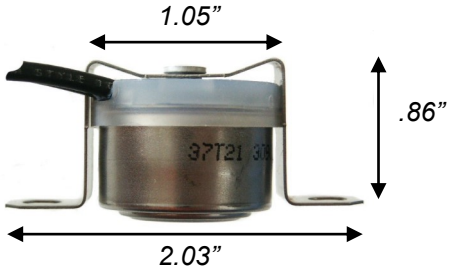

Ratings

Resistive Amps	120VAC	240VAC	277VAC
UL Recognized	10.0	5.0	1.0
CSA Certified	8.3	5.0	—

TAD & Associates, Inc.
P.O. Box 2170
Canyon Lake, Texas 78133

Phone: 830.964.4435
Fax: 830.964.4441
http://www.tad-associates.com

TD-1 Installation Options

Note: Older PL box shown.

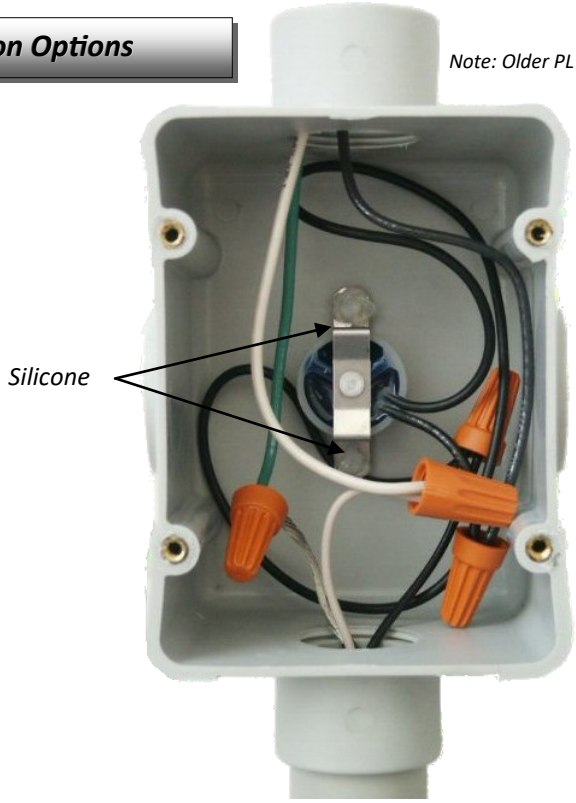

Line Sensing

- *Remove insulation from pipe and attach TD-1 to pipe wall to be heat traced.*
- *Secure TD-1 to pipe wall by passing tie wire through holes on TD-1 mounting bracket.*
- *Using a pair of pliers twist both ends of tie wire together until TD-1 is snug against pipe wall.*
- *Complete electrical connections and secure insulation.*

Ambient Sensing

- *Locate two plastic retainers at the back of the PL-1 junction box (sold separately).*
- *Align both holes of TD-1 mounting bracket with plastic retainers in back of junction box and determine size.*
- *If needed, use a pair of pliers to gently squeeze edges of plastic retainers to slightly conform to holes on TD-1 mounting bracket.*
- *Gently apply pressure on both ends of TD-1 mounting bracket and snap onto plastic retainers.*
- *Ensure snug fit and apply a bead of silicone around plastic retainers and TD-1 mounting bracket.*

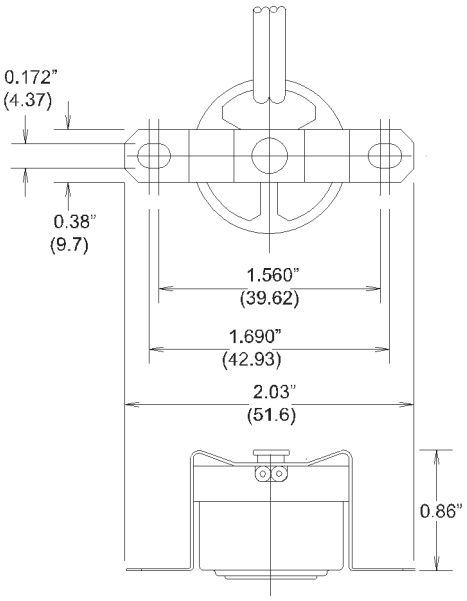

TAD & ASSOCIATES, INC. heat tracing specialists

121 Series

NEMA 7 THERMOSTAT

Made in USA

Controls

Description

The 121 line of thermostats are explosion & weatherproof temperature controls housed in a NEMA 4X, 7 lightweight die cast aluminum enclosure. They're approved for use in Class I Div. 1 & 2 hazardous locations. The E121 line sensing thermostat is ideal for process temperature applications. The B121 ambient sensing thermostat has an immersion stem for sensing atmospheric temperatures and is ideal for freeze protection applications. Both thermostats are SPDT (Single Pole Double Throw) switches that offer a very dependable and accurate control for heat trace circuits in hazardous locations.

Features

- *Class 1 Divisions 1 & 2, Groups B C & D*
- *Class 2 Divisions 1 & 2, Groups E F & G*
- *Class 3*
- *25°F - 325°F Range (E121)*
- *15°F - 140°F Range (B121)*
- *3/4" NPT hub for electrical*
- *304 SS Bulb/Capillary (E121), Immersion Stem (B121)*
- *NEMA 4X, 7, 9, IP66*
- *Internal Dial (Gasketed SS Tamper Resistant)*

TAD & Associates, Inc.
P.O. Box 2170
Canyon Lake, Texas 78133

Phone: 830.964.4435
Fax: 830.964.4441
http://www.tad-associates.com

Specifications

Style	Switch Type	Range	Accuracy	Differential	Bulb Size	Capillary	Immersion Stem	Finish
E121	SPDT	25°F - 325°F	±1% Range	3°F - 6°F	10 1/2" x 3/8"	10'	NA	304SS
B121	SPDT	15°F - 140°F	±1% Range	3°F - 6°F	NA	NA	9/16" x 2-11/16"	304SS

Electrical Ratings

Ratings	120V - 480V
Resistive Amps	22A

Ordering Information

Example Configuration	E121	Weight
E121	Line Sensing Thermostat	6.4 Lbs.
B121	Ambient Sensing Thermostat	6.6 Lbs.
Notes: 1660-13A12(E121), 1660-18912(B121)		

E121 Line Sensing

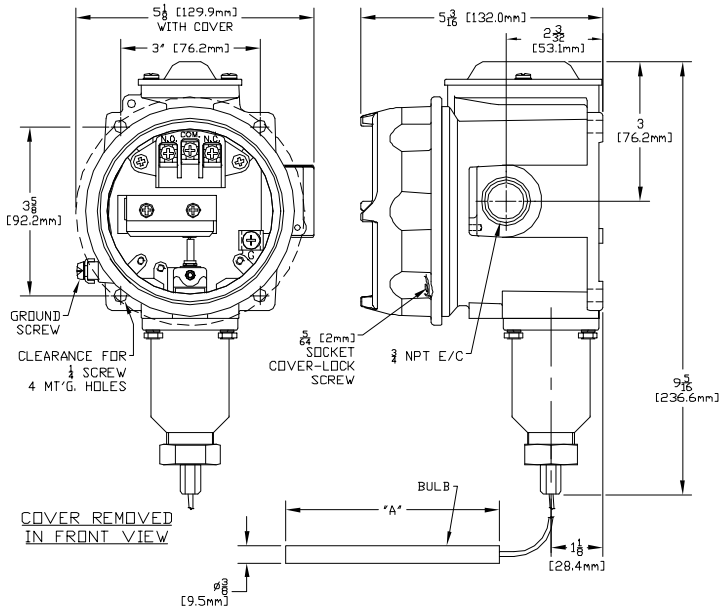

B121 Ambient Sensing

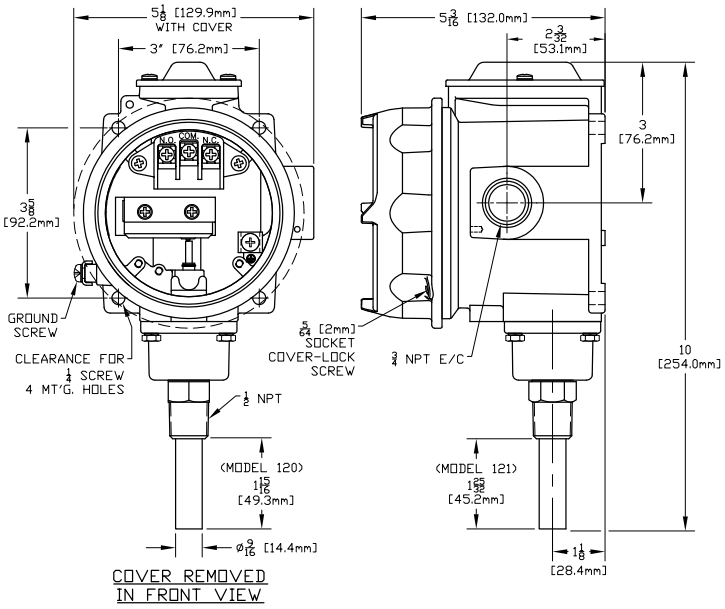

TAD & ASSOCIATES, INC.

heat tracing specialists

MasterTrace

Controls

MasterTrace Heat Tracing Systems are designed to be the very best in electrical heat trace control and monitoring for industrial applications.

ADVANTAGES

- *Custom Engineered Control Panels*
- *Easy-To-Read Interface,2x16-Character Alphanumeric Display, Field or Remote Mounted*
- *Modbus Comm*
- *RS-485 Serial Port Connectivity*
- *TraceCheck Early Warning System*
- *Power Limiting*
- *Load Shedding*
- *Solid State or Mechanical Switching Units*
- *Facility Wide Windows Based Software Monitoring*
- *Links to PLC or DCS*
- *Custom Engineered Software Designs*

Custom engineered control panels designed to your specific requirements incorporate the unequaled quality and reliability of MasterTrace control modules.

The Best in Monitoring

MasterTrace Heat Tracing Systems maximize the performance and reliability of any electrical heat tracing application. Sensing all critical heat trace variables and using the advanced algorithms of its microprocessor, MasterTrace controllers warn you of potential problems before they become critical and maintain your heat trace system 24 hours a day, 365 days of the year.

MasterTrace controllers continuously monitor your heat tracing system and provides you with user-settable alarms for temperature, heater current and ground fault current, all independent of the trip levels. Your heat tracing system is critical to your plant operations so

MasterTrace Systems are designed to perform self-check monitoring on all RTD's and switches. To further ensure that your heat trace works when you need it, the TraceCheck feature periodically energizes and checks for alarm conditions on all dormant lines and latches onto alarm functions.

TAD & Associates, Inc.
P.O. Box 2170
Canyon Lake, Texas 78133

Phone: 830.964.4435
Fax: 830.964.4441
http://www.tad-associates.com

FEATURED BENEFITS

TraceCheck Early Warning
Alerts operators to problems even when the circuit is not in use.

Modbus® Protocol
Allows easy interfacing with our MC-100 software or PLC and DCS systems.

Alarm Outputs
Common alarm alerts users to problems.

Centralized Interfacing
No need to move around the plant. All variables are monitored at a single location.

Statistics Monitoring
Save energy by monitoring peak demand times.

Staggerstart
Limits initial start up power.

Proportional Control
Provides tight process temperature control.

Advanced Control
The advanced features of MasterTrace allow it to handle single-phase to three-phase heat trace applications with switch ratings up to 100A@ 600VAC. Integral user-settable ground fault trip protects your heat trace without costly ground fault breakers. The user-settable Ground Fault test function lets you know if Ground Fault monitoring is functioning properly. RTD inputs (dual RTD inputs available) have a user-settable fail-safe strategy. A Master Override input allows for external control for load-shedding or ambient control.

Friendly Interfacing
MasterTrace interfaces make interrogation and programming easy for all MasterTrace controllers.

Two choices are available:
- *Local Interface (MI100)*
- *Remote Interface (MR100)*

ML100 communicates with a single controller of up to 10 circuits and up to five feet away. MR100 communicates with multiple controllers, up to 30 controllers or 300 circuits, to a maximum of 4,000 feet without repeaters.

Energy Management
Operators have many reasons to reduce their environmental impact yet may be missing substantial opportunities to become greener without making significant investments. Opportunities for energy savings are in, perhaps, the most obvious of places – the plant. Monitoring energy and energy costs are the starting points and MasterTrace provides you with the tools through the measured values of: Heater Utilization, Power Consumption (MWh), and Operating Costs ($0 to $1,000,000).

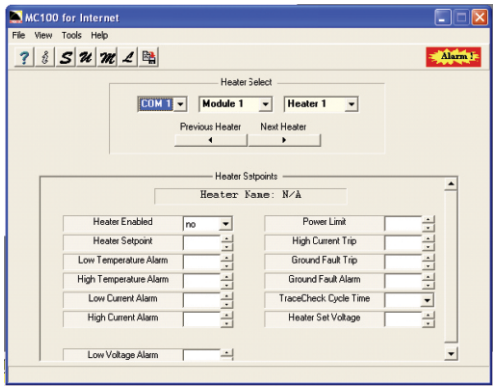

A System With a Future
MasterTrace is the most complete system of heat tracing controllers. MasterTrace can handle all your heat trace control requirements and is the only heat trace system that offers Local, Group and Central Computer Interfaces (See MC100). MasterTrace combines the power and flexibility you need today with the ability to expand to meet your needs for the future.

MC100 Centralized Monitoring
For plant wide monitoring, the MC100 windows software package provides programming and monitoring for MasterTrace heat tracing controllers on your PC. Process setpoints and alarm levels are programmed for each heater through the computer keyboard reducing data entry on large systems. Setpoint programming and configuration functions are password protected to restrict access. By connecting individual MasterTrace modules or panels together, heat tracing throughout an entire plant can be programmed and monitored from a single location.

MasterTrace Product Specifications

APPROVALS

Mechanical:	CSA ordinary (general purpose) areas
Solid-State:	CSA Class I, Division 2, Group A, B, C, D CSA Class I, Zone II Group IIC
Alarm Output:	NO and NC programmable contacts
Alarm Output Rating:	Mechanical: 1.0A @ 120VAC max. (ordinary areas) 10mA @ 30VAC max. (hazardous areas)
Solid-state:	0.1A @ 30VAC max.
Control Power:	120VAC
Switch Rating: Internal:	30A @ 280VAC max.
External:	100A @ 600VAC max.
Temperature Input:	One or two 100Ω, platinum, 3-wire RTD per point, 20Ω max. lead resistance ± 0.2A accuracy over -50ºC to +500ºC
Heater Current Input:	One current transformer per point 3% ± 0.2A accuracy over 1.0A to 100A
Ground Fault Input:	One current transformer per point 5% ± 2mA accuracy over 0.01 to 3.0A
Operating Range:	-40ºC to +60ºC (LCD screen -20ºC to +60ºC) VFD vacuum fluorescent display -30ºC to +60ºC
Communication Ports:	(1) Parallel local interface connection (2) Serial network connections

SERIAL COMMUNICATIONS

Type:	RS 485
Protocol:	Modbus® RTU
Transmission Rate:	1200-9600 baud
Interconnect:	2-wire, shielded, twisted pair
Highway Distance:	4,000 feet without a repeater
Modules Per Highway:	(1) interface and (30) control modules

MEASURED VALUES

Temperature:	-50ºC to 500ºC (-58ºF to 932ºF)
Minimum Temperature:	-50ºC to 500ºC (-58ºF to 932ºF)
Maximum Temperature:	-50ºC to 500ºC (-58ºF to 932ºF)
Heater Current:	1.0A to 100A
Heater Percent Power:	0 to 100%
Peak Heater Current:	1.0A to 100A
Ground Fault Current:	0.01A to 1.0A
Heater Utilization:	0 to 100%
Power Consumption:	0 to 1,000 MWh
Operating Cost:	$0 to $1,000,000

ALARM MESSAGES

Temperature:	High temperature alarm, Low temperature alarm
Current:	High current alarm, Low current alarm, High current trip
Ground Fault Current:	Ground fault current alarm, Ground fault current trip
TraceCheck:	Switch shorted, High current alarm, Low current alarm, High current trip, Ground fault current alarm, Ground fault current trip
Hardware:	Self-check failure, switch shorted, RTD open, RTD shorted

USER-SETTABLE OPTIONS

Heater Status:	Enable or disable
Heater Name or Tag:	16-character alphanumeric
Temperature Units:	ºC or ºF
Control Strategy:	On-off or proportional*
Deadband:	0º to 50ºC (0ºF to 90ºF)
Stagger Start:	* On or off
Power Limit:	* 1.0A to 100A
Temperature Setpoint:	0ºC to 500ºC (32ºF to 932ºF)
High Temperature Alarm:	0ºC to 500ºC (32ºF to 932ºF)
Low Temperature Alarm:	-50ºC to 500ºC (32ºF to 932ºF)
High Current Alarm:	1.0A to 100A
Low Current Alarm:	1.0A to 100A
High Current Trip:	1.0A to 100A
Ground Fault Alarm:	0.01A to 1.0A
Ground Fault Trip:	0.01A to 1.0A
TraceCheck™ Interval:	1 to 24 hours
RTD Fail-Safe:	Heater on or heater off
Master Override:	ON or OFF
Alarm Contacts:	NO or NC for each contact
Alarm Light:	Alarm on, alarm off, Flash during alarm then on, Flash during alarm then off

* Available on solid-state modules only

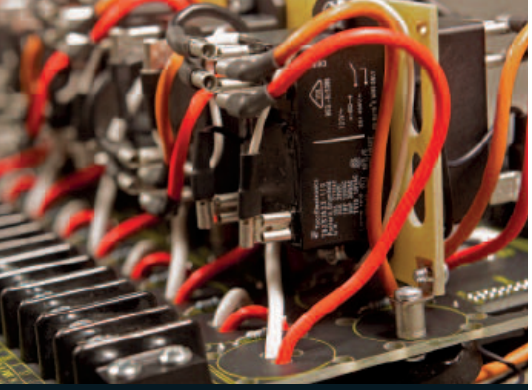

In heat trace design, cable and conduit for hard-wired RTD communications represent a large portion of project costs, even on small electrical heat tracing system designs. Wireless data transfer technology is becoming one of the largest areas of growth in industrial plant applications and Nextron is the temperature control systems manufacturer that pairs technical innovation with savings.

CSA approved Class I, Division 2, Zone 2 microprocessor-based RTD sampler capable of transmitting and receiving data using the concept of direct sequence or frequency mode hopping wireless transmission. Using a wireless system, temperature sensors are wired to RTD samplers located in the pipe racks and temperature information is transmitted to the controller via wireless modem, dramatically reducing field-wiring costs to the end user. These transmitters then send temperature information to a remotely located MasterTrace module.

COMMUNICATION MEDIA

Rs485 Cable:	Transmit RTD measurements via RS485 cable (Figure 1)
Wireless RF Modem:	Transmit RTD measurements via Wireless RF modems (Figure 2)

USER INTERFACE

LED:	Power on, RTD OK, transmit, receive
Rs485 Port:	Accessible to laptop, PC

ENVIRONMENT

Approvals:	CSA Class 1, Division 2, Groups A, B, C, D Class 1, Zone 2, Ex nA IIC, AEx nA IIC
Operating Range:	-40°C to +50°C
Conformal Coating:	Boards conformal coated for hostile environments. Altitude: 0-200m

ENCLOSURE

Type:	NEMA-4 steel
Size:	10"H x 8"W x 4"D
Features:	Quick release latches to open door (1) 0.875" conduit knockout for power wiring, two 1.093" conduit knocks for RTD wiring, one 0.75" conduit knock for RS485 cable or antenna

TEMPERATURE MEASUREMENT RANGE

Range:	-50°C to 500°C, -58°F to 932°F
Absolute Accuracy:	±2.5°C, ±4.5°F
Repeatability:	±1°C, ±1.8°F
RTD:	100Ω platinum, 3-wire 10Ω max lead resistance

MODEL

Configuration:	SAM-RTDxx-120V-y xx=10: 10 RTDs xx=20: 20 RTDs y=R: Rs485 y=M: Wireless

CONTROL POWER

Power Requirements:	SAM-RTDxx-120V-y:120VAC, 10VA
Line Frequency:	50 or 60Hz
Protection:	Protected by non-replaceable 2A, time lag, 350 VAC fuse MOV transient protection & RC snubber

Figure 1
Transmit RTD Measurement Via RS485 Cable

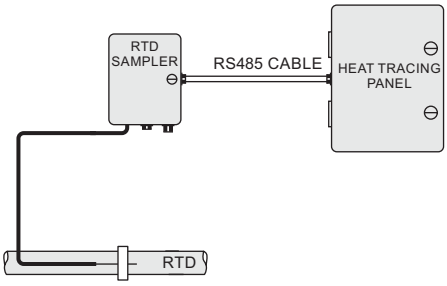

Figure 2
Transmit RTD Measurement Via Wireless RF Modem

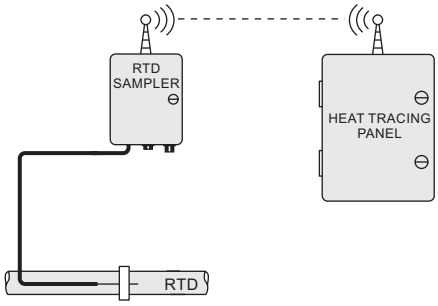

Manufactured by:

NEXTRON

TAD & ASSOCIATES, INC. heat tracing specialists

Made in USA

MS2101/2

HEAT TRACING CONTROL PANELS

Controls

Description

The MS-2101 temperature controller is a single point, microprocessor based heat trace controller designed for use in Class 1 Division 2 areas. The MS-2101 provides the control and monitoring for all types of heat tracing systems. The MS-2101/2 comes with two 30A circuits that are controlled with either one or two of the RTD inputs provided. These RTD inputs are user-settable with fail-safe features and can be configured to operate using only one, with the second as a backup. Alternatively, they can be configured to act as a high temperature cutout, or both can be used to control heat tracing based on values of the highest, lowest, or average of the two readings. The MS-2101/2 have both ON/OFF Control, with adjustable deadband, and Proportional Control that will maximize the performance and reliability of self-regulating and other types of heat trace. The master override input provides external control for load shedding or ambient temperature override. The PowerLimit feature reduces high inrush current associated with self-regulating cables, eliminating the requirement for over-sized breakers, and allows the operator to set the maximum average heater current level of each circuit. The MS-2101/2 has the capability of networking with other MasterTrace controllers providing the most flexible and cost effective solutions for your existing and future heat trace needs. The MS-2101/2 continuously monitors all important heat trace variables such as temperature, current, voltage and ground fault detection and alerts operators of possible problems before they occur. All user-selectable alarm levels are independent of the trip levels and additionally, the MS-2101/2 performs a self-check and monitors the RTD and switches. To ensure that your heat tracing system operates 24-7, 365 days/year, TraceCheck periodically energizes and checks for alarm conditions on all dormant signals. The MS-2101/2 also logs minimum and maximum values and energy usage. The MS-2101/2 offers a lot in a small convenient package.

TAD & Associates, Inc.
P.O. Box 2170
Canyon Lake, Texas 78133

Phone: 830.964.4435
Fax: 830.964.4441
http://www.tad-associates.com

MS-2102 Specifications

Range	-50 to +500°C (-58 to 932°F)
Accuracy/Repeatability	±2°C, ±1°C
RTD Input	(2)Single 100Ω platinum, 3-wire 20Ω maximum lead resistance
Configuration	(2) Single-pole control circuits 800A 1 cycle inrush
Ratings	120V or 277V, 30A continuous, 50-60Hz
Current Measurement	0.1 to 30A 3%±0.2A
GF Measurement	10 to 1000mA 5% ±2mA
Voltage Measurement	0 to 300VAC 3%±2V (Circuit 1 ONLY)
Control Power	From heater 1 voltage 120V or 277V, 10VA max
Protection	Heater 1 voltage protected by 2A fuse MOV transient protection
Communications	(1) Modbus® RTU via RS485
Transmission Rate	600, 1200, 2400, 4800, 9600 baud
Modules/Highway	32 Control Modules
Display	16-character x 2-line LCD display
Keypad	Setpoint, Status, Up, Down, Value Up, Value Down, Reset, Store
Panel Indicators	Power On, Heater On, Serial Comm, System Fail, Process Alarm
Enclosure	NEMA-4X painted steel, 10"H x 8"W x 6"D
Features	3/4" knockout for power and (3)1/2" knockouts for miscellaneous
Alarms	High/Low Temp, High/Low Current, Ground Fault, Low Voltage, Self-Check Fail, Relay Fail, RTD Open/Short
Approvals	CSA C/US Class I, Div. 2, Groups A, B, C, D Class I, Zone 2, Groups IIC Class II, Div. 2, Groups F and G Class III

MS-2101 Specifications

Range	-50 to +500°C (-58 to 932°F)
Accuracy/Repeatability	±2°C, ±1°C
RTD Input	Dual 100Ω platinum, 3-wire 20Ω maximum lead resistance
Configuration	One dual-pole control circuit 800A 1 cycle inrush
Ratings	120V-277V, 30A continuous, 50-60Hz
Current Measurement	0.1 to 30A 3%±0.2A
GF Measurement	10 to 1000mA 5% ±2mA
Voltage Measurement	0 to 300VAC 3%±2V
Control Power	From heater voltage 85-280V, 10VA max
Protection	Voltage protected by 2A fuse MOV transient protection
Communications	(1) Modbus® RTU via RS485
Transmission Rate	600, 1200, 2400, 4800, 9600 baud
Modules/Highway	32 Control Modules
Display	16-character x 2-line LCD display
Keypad	Setpoint, Status, Up, Down, Value Up, Value Down, Reset, Store
Panel Indicators	Power On, Heater On, Serial Comm, System Fail, Process Alarm
Enclosure	NEMA-4X painted steel, 10"H x 8"W x 6"D
Features	3/4" knockout for power and (3)1/2" knockouts for miscellaneous
Alarms	High/Low Temp, High/Low Current, Ground Fault, Low Voltage, Self-Check Fail, Relay Fail, RTD Open/Short, Continuity
Approvals	CSA NRTL/C and FM Class I, Div. 2, Groups A, B, C, D Class I, Zone 2, Groups IIC Class II, Div. 2, Groups F and G Class III

Ordering Information

Example Configuration	**MS-2101**	
Master Trace	System Voltage	Weight
MS-210_	1=120V-277V	15 Lbs.
	2=120V/277V	15 Lbs.

TAD & ASSOCIATES, INC. heat tracing specialists

Made in USA

DPNL

CUSTOM DISTRIBUTION PANELS

Controls

Description

DP distribution panels are built to job requirements. All DP panels feature solid state programmable controls and solid state relays or circuit breakers for efficient & reliable control of heating cables. A durable NEMA 4X rain-tight enclosure protects against the elements ensuring that all electrical is safely protected. Whether it be process temperature or freeze protection, distribution panels offer a singular, versatile and convenient source for locating your heat trace circuits for easy readout and assessment of system health. Distribution panels offer finer and easier adjustment of setpoint temperatures and better precision in monitoring over mechanical thermostats. Distribution panels can be customized to allow for future integration of controllers/relays for expanded heat trace systems. Distribution panels also come with serial comm ports for remote operability and can be configured with direction antennas for wireless communications, so you have access to your heat trace system from anywhere in the world.

TAD & Associates, Inc.
P.O. Box 2170
Canyon Lake, Texas 78133

Phone: 830.964.4435
Fax: 830.964.4441
http://www.tad-associates.com

Ordering Information

Example Configuration	DPNL-2C-120V-2R/20A-10P-H-G-4X					
DPNL	Controllers	Operating Voltage	No. Relays	Relay Amps	Points	Options
Distribution Panel	1C=1 Controller	120V	1R=1 Relay	10A	*5P=5	H=Heated
	2C=2 Controller	208V	2R=2 Relays	20A	10P=10	G=GFI Protection
	3C=3 Controller	220V	3R=3 Relays	30A	15P=15	
	4C=4 Controller	240V	4R=4 Relays	35A	20P=20	
		277V	5R=5 Relays	45A	25P=25	
		480V	6R=6 Relays	55A	30P=30	

Notes: Controller operates on 100VAC to 240VAC or 24VDC and is preconfigured to accept a type K thermocouple. Each panel comes prewired with a small piece of SW-K to illustrate proper wiring. Please observe correct polarity when wiring thermocouple. For large scale heat trace jobs it is prudent to divide out circuits over multiple relays and gang relays into individual controllers (zoning). Avoid clustering circuits into large capacity singular relays. Never exceed 80% of a relay's capacity (National Electric Code). All parallel heat trace has two conductors and ground braid. When determining number of terminals each conductor is considered a point or terminal. 5 points minimum.*

Features

- *Zero Voltage & Random Turn-On Switching*
- *Low Leakage*
- *Integral Heatsink*
- *DIN Rail or Panel Mount*
- *Status Indicating LED (Green)*
- *AC Control*
- *-40°F - 176°F (–40°C to 80°C) Operating Range*
- *Max Wiring Size 10AWG*
- *480V-1000V for Constant Wattage Systems*

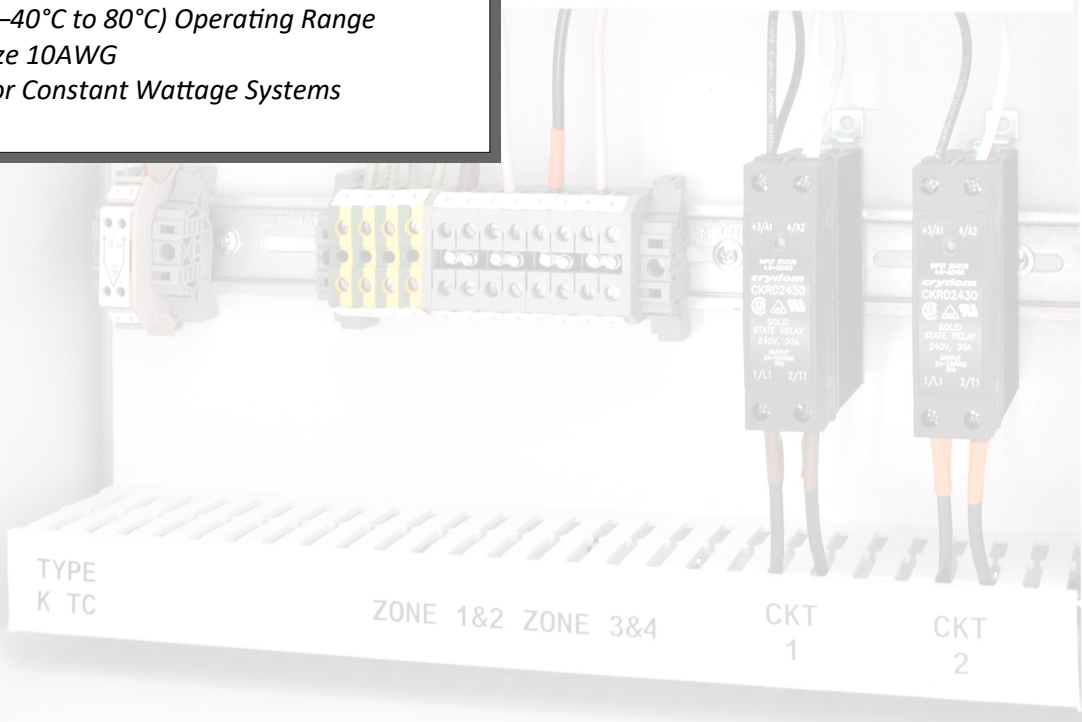

Note: Specifications subject to change.

TAD & ASSOCIATES, INC. heat tracing specialists

RSD 4.5-120-35A

SNOW MELTING CONTROLLER

Description

The RSD 4.5 is a snow melting system controller which utilizes remote moisture and temperature sensors. Controller is fully automatic, it senses both moisture and temperature during precipitation that could result in ice formation. The system operates only when ice or melt runoff water is detected. System can be manually operated, or is fully automatic. Control panel has indicators to allow visual confirmation of automatic enabled mode and indicate when the heater is on. The RSD 4.5 comes with a built-in 35A contactor for use with 120V-277V. Other contactors can be substituted for greater loads. Please provide system voltage when ordering.

Specifications

Energize temperature: 38°F
Minimum on time: 1 hour
Control voltage: 120-277VAC (Specify voltage)
Built-In contactor: 35A resistive @ 120-277VAC
Contactor Output: T1 and T2
Mounting Options: Indoor/Outdoor
Control toggle features AUTO/OFF/ON push button
Default setting: AUTO
Energy Saving Features: Auto toggle @ 70°F for 10 min.

Note: Turn off power to during Summer months. Always de-energize unit prior to maintenance.

Features

- *Features a hold-on timer which will continue to apply heat for a time after the icing condition stops. This allows the heater to completely melt remaining snow and ice.*
- *Controller is equipped with a push-button which allows the operator to manually energize or disable the heater as desired.*
- *Controller will monitor ambient temperature and place itself in the AUTO mode from the ON/OFF modes in the event it monitors 70°F for 10 minutes.*
- *Mount system allows tab-screw mounting.*

TAD & Associates, Inc.
P.O. Box 2170
Canyon Lake, Texas 78133

Phone: 830.964.4435
Fax: 830.964.4441
http://www.tad-associates.com

TAD & ASSOCIATES, INC. heat tracing specialists

AIC 4

SNOW MELTING CONTROLLER

Moisture sensing grid

Description

The AIC is a universal snow and ice detector used to control snow melting heaters. Controller operates heaters during snowfall or icing conditions. When operating only during precipitation WITH cold, substantial energy savings are seen over traditional thermostatic controls.

Features

- *Hold-on timer will keep system energized for a time after the icing condition stops. This allows the heaters to completely melt remaining snow and ice.*
- *Push-button allows the operator to energize/de-energize the system or run in full auto.*
- *The AIC4 switches to AUTO if it senses 70°F for 10 mins. This is a an exclusive safety feature that ensures your system is not unnecessarily energized if left in Manual On mode.*
- *Universal mount system allows either conduit top mounting or through mounting tabs.*

Operation

Unit is designed to be fully automatic, it senses both moisture and temperature. During precipitation that could result in ice formation the control will energize its output relay. Increased load capacity, or 3-phase loads, can be operated by having this unit operate a remote mounted contactor.

Specifications

1. *Sensor initiates control operation during conditions conducive to ice formation. That is, precipitation when the ambient temperature is below 40°F.*
2. *The controller will assure a minimum on time of one hour.*
3. *Controller operates on 120VAC or 208-277VAC*
4. *The relay provided is rated at 16A @ 120V. Local codes and accepted wiring practices may limit actual usage further. For 3-Phase or for larger loads, use this unit to power an available external contactor.*
5. *Weather resistant enclosure for outdoor mounting.*
6. *The controller provides an AUTO/OFF/ON switch.*

Normal boot-up mode is AUTO. In AUTO, the control will activate its relay when icing conditions are indicated by the sensor and will energize for an hour. In the OFF position, the heater remains off regardless of icing conditions until mode is changed. In the ON position, the contactors are engaged until mode is changed.

TAD & Associates, Inc.
P.O. Box 2170
Canyon Lake, Texas 78133

Phone: 830.964.4435
Fax: 830.964.4441
http://www.tad-associates.com

TAD & ASSOCIATES, INC. heat tracing specialists

T1441/T1441X

CAST HEAD RTD SENSOR

Controls

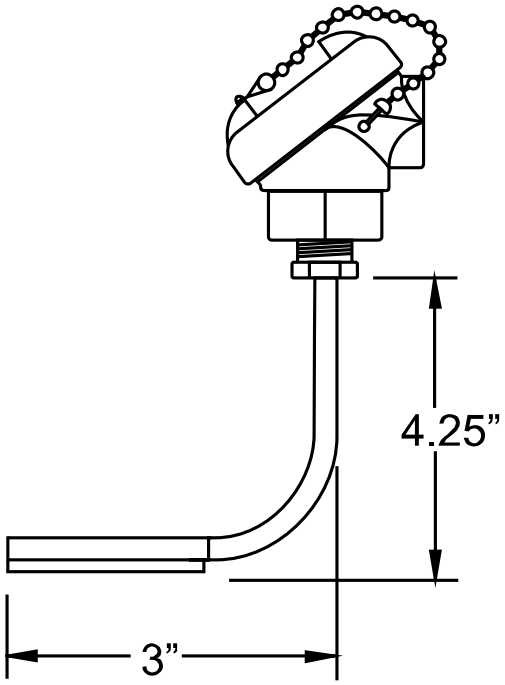

T1441

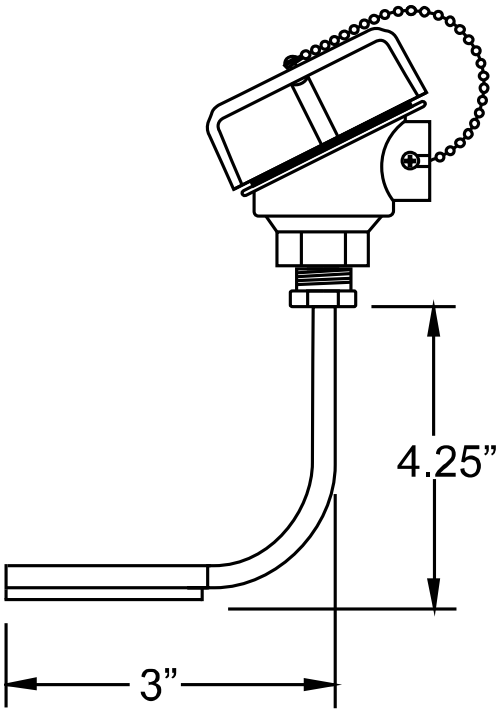

T1441X

Description

The T1441 series is a temperature controller for controlling heat trace systems in ordinary and corrosive environments. It is ideal for process temperature control and freeze protection.

Features

- *Cast aluminum. T1441 is NEMA 4 and T1441X is explosion proof for Class 1 Division 1 & 2, Groups C & D.*
- *Sheath is 1/4” OD Stainless Steel*
- *Operating range is 0°F to 700°F*
- *Element Type is 100Ω, 3-Wire RTD, DIN 0.00385*
- *1/2” entry*
- *Tolerance: Class B, ± 0.12%*

TAD & Associates, Inc.
P.O. Box 2170
Canyon Lake, Texas 78133

Phone: 830.964.4435
Fax: 830.964.4441
http://www.tad-associates.com

TAD & ASSOCIATES, INC. heat tracing specialists

Made in USA

R Series

CONNECTION KITS

Accessories

RTC

RSL

RPC

FM

Description

The R series connection kits offer the most versatile and durable platform for terminating constant wattage, self-regulating and MI heating cables in both ordinary & division 2 locations. The RPC & RTC both have an 3/4" conduit opening for service while the RSL functions as an monitor light. Each enclosure comes with DIN mounted 600V rated terminals for quick & reliable electrical connection. The RPC comes standard with an end seal for a complete circuit. The RSL accommodates a range of service voltages from 120V-277V and is used for indicating voltage at the end-of-circuit. The RTC can function as either a 3-way power connection or above-insulation splice & tee kit. R series kits are NEMA 4X rated and approved for use in Class 1 Division 2 areas (3rd Party Certification).

TAD & Associates, Inc.
P.O. Box 2170
Canyon Lake, Texas 78133

Phone: 830.964.4435
Fax: 830.964.4441
http://www.tad-associates.com

RPC Contents

- Junction Box
- Cover
- Mounting Bracket
- 2 - Sealing Grommets
- Lock Ring
- Compression Fitting
- Power Termination Boot
- End Termination Cap
- Silicone Packet
- Pipe Strap

RSL Contents

- Junction Box
- Cover w/ 33mm LED
- Mounting Bracket
- Compression Fitting
- 2 - Sealing Grommets
- Pipe Strap
- Lock Ring
- Power Termination Boot
- Silicone Packet

RTC Contents

- Junction Box
- Cover
- Mounting Bracket
- Compression Fitting
- 2 - Sealing Grommets
- 1" NPT Plug
- Pipe Strap
- 2 - Lock Rings
- 3 - Power Termination Boot
- Silicone Tube

Features

- Corrosion resistant
- Thermal stability
- Non-flammable
- Captive stainless hardware
- Water resistant
- 3/4" conduit hub opening
- DIN rail mounted terminal blocks
- UV resistant

Ordering Information

Example Configuration	**RPC-1-SR**		
Connection Type	Pipe Size	Cable Type* (RPC)	Weight
RPC	1=1"-3"	SR=Self-Regulating	1.9 Lbs.
RSL	2=2"-14"	CW=Constant Watt	2.0 Lbs.
RSL-4- (480V)	3=3/4"-1"		2.0 Lbs.
RTC			5.0 Lbs.

Note: *Cable type is for end termination purposes (RPC ONLY). Not for use with RSL. RSL-4 is for 480V constant wattage ONLY! See banding sizes below for mounting considerations.

Construction

Enclosure[1]	Fiberglass Reinforced Duroplastic Polyester
Stand-Off/Compression[2]	Ryton PPS
Temperature Range[1]	-60°F to 420°F
Melting Point	480°F[1] , 540°F[2]
Entry Hole (RPC, RTC)	1-1/16" (Hole Diameter), 3/4" Hub
Lamp Type (RSL)	30mm LED 24VDC-277V
Termination Cap (RPC)	500°F Silicone
Dimensions (RPC, RSL)	4.8"Lx4.42"Wx3.58"D (w/ cover)
Dimensions (RTC)	6-13/16"Lx4"Wx3-9/32" (w/ cover)

Note: Assembled in U.S. with some imported materials

TAD & ASSOCIATES, INC. heat tracing specialists

Made in USA

PL/TML

CONNECTION KITS

Accessories

PL Power Connection

- Junction Box
- Cover
- Mounting Bracket
- 1" NPT Plug
- 2 - Pipe Straps
- End Termination Cap
- Terminal Block
- Silicone Packet

TML Monitor Kit

- 3 Hub Junction Box
- Indicating Light Cover
- 1" NPT Mounting Bracket
- 2 - 1" NPT Plugs
- Terminal Block
- 2 - Pipe Straps

Description

The PL power connection kit is a simple and inexpensive solution for terminating constant wattage and self-regulating cables in non-hazardous locations. The TML monitor light kit is used for assessing the operating status of electric heating cables in the field. The TML is used in lieu of traditional end seals when a visual cue of system functionality is desirable. It comes with an LED to provide years of uninterrupted service. Both connection kits come with terminal blocks that can be configured as floating or fixed and the two supplied pipe straps are used for securing the mounting bracket to the pipe. The enclosure and mounting bracket are made from high temperature nylon that is rated up to 380°F and is NEMA 4X rated. The supplied end termination cap in the PL is used to terminate the heat trace at the end of the circuit. The PL power connection kit offers a complete termination package for one heat trace circuit.

TAD & Associates, Inc.
P.O. Box 2170
Canyon Lake, Texas 78133

Phone: 830.964.4435
Fax: 830.964.4441
http://www.tad-associates.com

Ordering Information

Material	Nylon Polifil 627
Melting Point	400°F
Temperature Range	-60°F to 380°F
Hub Size	1” NPT
Light (TML)	22mm LED
End Seal Type (PL)	Silicone 500°F
Dimensions	6-13/16”Lx4”Wx3-9/32”D(w/ cover)

Construction

Example Configuration	**TML-2-1**			
PL[1]	Voltage[2]	Pipe Size[1,2]	Cable Type[1]	Weight
Power Connection Kit	1=120V	1=1”-3”	SR=Self-Regulating	1.3 Lbs.
	2=208V-277V	2=2”-14”	CW=Constant Watt	1.5 Lbs.
	4=480V*	3=3/4”-1”		1.0 Lb.
TML[2]				
Monitor Light Kit				

Note: Cable type is for end termination purposes. Voltage applies to TML only. *480V is exclusive to constant watt cables.

Setup & Configuration Options

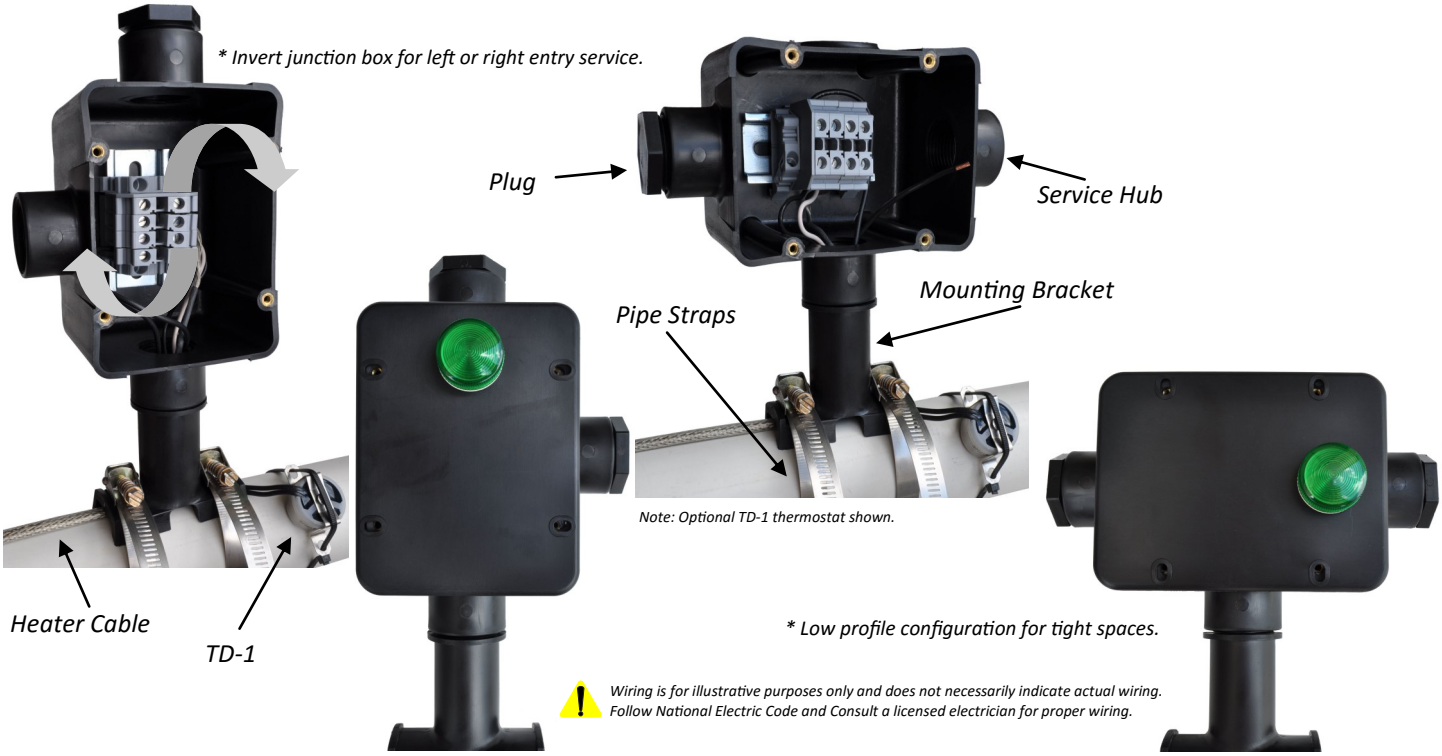

Wiring is for illustrative purposes only and does not necessarily indicate actual wiring. Follow National Electric Code and Consult a licensed electrician for proper wiring.

TAD & ASSOCIATES, INC. heat tracing specialists

Made in USA

RGPK/SCK-2

POWER CONNECTION KIT

Accessories

SCK-2

- 3/4" Nylon CGB Fitting
- 2 - Heat Shrink (Conductors)
- Heat Shrink (Ground)
- Small Heat Shrink
- Large Heat Shrink
- 2 - Wire Nuts (Conductor)
- Wire Nut (Ground)

RGPK

- Junction Box
- Terminal Block
- 2 - Water Tight Fittings
- 2 - 1" NPT - 3/4" NPT Reducers
- 1" NPT Plug
- 2 - Black Heat Shrink (Inner Jacket)
- 4 - Black Heat Shrink (Conductors)
- 2 - Green Heat Shrink (Ground Braid)

Description

The RGPK power connection kit is for making power terminations or tee splices inside a NEMA 4X enclosure through water tight CGB fittings primarily for roof and gutter applications. The RGPK power connection kit may be used for single or multiple power connections. An additional CGB expansion kit is required for tee splices.

The SCK-2 power termination kit is for terminating self-regulating or constant wattage heater cables into a NEMA 4X enclosure (customer supplied) through a CGB fitting. The kit comes with heat shrink tubing to isolate each conductor including the ground braid. The SCK-2 is ideal for use in roof and gutter applications and comes with wire nuts for connecting to service leads.

TAD & Associates, Inc.
P.O. Box 2170
Canyon Lake, Texas 78133

Phone: 830.964.4435
Fax: 830.964.4441
http://www.tad-associates.com

Construction

Material	*Nylon Polifil 627*
Melting Point	*400°F*
Tensile Strength	*6,800 PSI*
Izod Impact Strength	*Ft./Lb./Inch Notch 16*
Rockwell Hardness	*R Scale 105*
Operating Temperature Range	*-60°F to 380°F*
Hub Size	*1" NPT*
Dimensions	*6-13/16"Lx4"Wx3-9/32"D*
CGB Fitting	Nylon 6/6 (212°F)
Bushing	Buna-N (212°F)

Setup & Configuration Options

Ordering Information

Example Configuration	***RGPK-SR***	
RGPK	*Cable Type*	*Weight*
Power Connection Kit	*SR=Self-Regulating*	*1.5 Lbs.*
SCK-2	*CW=Constant Watt*	*1.5 Lbs.*
Power Connection Kit		
Note: Different bushing used for constant wattage cables.		

CGB Expansion Kit

Note: CGB expansion kit required for making tee splices.

TAD & Associates, Inc. P.O. Box 2170 Canyon Lake, TX 78133 800-755-7602

TAD & ASSOCIATES, INC. heat tracing specialists

Made in USA

RK

ROOF & GUTTER ACCESSORIES

Accessories

RCK Contents

- 5 - Double Clips

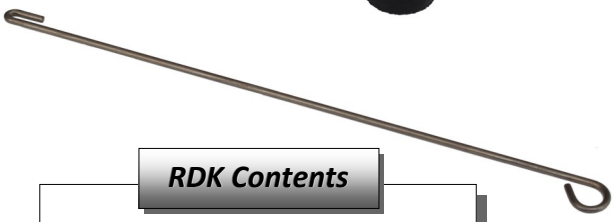

RGSK Contents

- 5" Heat Shrink Tube
- 3" Heat Shrink Tube
- (2)1" Small Heat Shrink Tube
- 10-12 AWG Butt Splice
- (2)12 or 16 AWG Butt Splices

RDK Contents

- Hanger
- Rubber Hose
- Hose Clamp

Ordering Information

Example Configuration	RCK	Weight
RCK	Roof Clips	1.2 Lbs.
RDK	Downspout Hanger	0.6 oz.
RGSK	Roof & Gutter Splice Kit	2.0 oz.

Description

RCK roof clips are used to secure heat trace to rooftops. Roof clips can be used on most types of roofing surfaces with self-regulating and constant wattage heating cables. The kits contains enough double clips to complete 7 linear feet of roof edge.
RDK downspout hangers are used to suspend heat trace in downspouts to melt ice and ensure proper drainage. Downspout hangers can be used with constant wattage or self-regulating heating cables. Downspout hangers are secured to gutters with a sheet metal screw (not supplied).
The RGSK splice kit is used for splicing two self-regulating or constant watt cables together in the field using industrial grade heat shrink with integral adhesive. The heat shrink has an temperature range of –67°F to 230°F and is constructed of polyolefin with a 3:1 shrink ratio and an internal sealant to ensure a watertight, super strong seal.

TAD & Associates, Inc.
P.O. Box 2170
Canyon Lake, Texas 78133

Phone: 830.964.4435
Fax: 830.964.4441
http://www.tad-associates.com

TAD & ASSOCIATES, INC. heat tracing specialists

Made in USA

ESK/TSK

INLINE & TEE SPLICE KITS

Accessories

TSK Contents

- 2 - Self-Vulcanizing Tape
- 3 - Tee Lugs
- Ground Lug
- Nylon Zip Tie

Actual Size

ESK Contents

- 2 - Strips of Splicing Tape
- 3 - Small Crimp Lugs
- Large Crimp Lug

Description

The ESK inline splice kit is used for splicing together two parallel resistant electric heating cables under the insulation whereas the TSK tee splice kit is used for splicing together three cables. The advantages of using the under the insulation splice kits is for low cost, low visibility, and fewer protruding ancillaries along the pipe. The self-vulcanizing tape has good elasticity and is used for dielectrically insulating the conductors from each other. The splice kits are for use in ordinary, non-classified areas only.

Ordering Information

Example Configuration	ESK-14	
Splice Type	Conductor Size	Weight
TSK=Tee Splice	12=12 AWG	1.0 oz.
ESK=Inline Splice	14=16-14 AWG	1.0 oz.

Note: The 14 can accommodate 16-14 AWG conductors (ideal for all self-regulating and FEP-LT, FEP-M) and the 12 can accommodate 14-12 AWG conductors (ideal for FEP).

TAD & Associates, Inc.
P.O. Box 2170
Canyon Lake, Texas 78133

Phone: 830.964.4435
Fax: 830.964.4441
http://www.tad-associates.com

TAD & ASSOCIATES, INC. heat tracing specialists

Made in USA

Accessories

STRAPPING TAPES

Description

Fiberglass tape is traditionally used to secure heat tracing to pipes, valves, flanges, pumps, instrumentation, etc. FG-1 fiberglass tape is a general purpose tape reinforced with glass-yarn filaments that gives the tape high tensile strength, low stretch and superior tack. It's excellent for freeze protection and low temperature process applications. FG-3 glass cloth tape is a glass cloth tape with a high-temperature thermosetting silicone adhesive. This adhesive provides an increased bond once applied in areas of high ambient/process temperatures. FG-3 should be used in medium-high process temperature applications. AL-1 aluminum tape is used to improve heat transfer between tracers and pipes/vessels while lowering cable sheath temperature. Aluminum tape is mandatory for use on all polyvinyl/polyethylene pipes & FRP vessels and is overall beneficial in conductance of heat in all heat tracing applications by ensuring a healthy mechanical bond.

Specifications

Tensile Strength (lbs/inch)	300(FG-1), 180(FG-3), 21(AL-1)
Overall Thickness (Mils)	6.0(FG-1), 7.0(FG-3), 3.4(AL-1)
Elongation	4.5%(FG-1), 5%(FG-3), 4%(AL-1)
Temperature Rating	185°F(FG-1), 400°F(FG-3), -40°F-250°F(AL-1)
Electrical Strength (Volts)	3,000 (FG-3)
Backing	Glass Filament, Glass Cloth, 2 Mil Dead Soft Aluminum
Adhesive	Rubber Resin, High-Temp Silicone, Acrylic
Adhesion (oz./inch)	55, 40, 45
Dimensions (Weight)	3/4" x 180' (.8 Lbs.), 1/2" x 108' (.3 Lbs.), 2" x 150' (1.5 Lbs.)

Note: For FG tapes, the amount of tape required to secure heat trace is determined by taking the pipe diameter and finding the circumference (C = D x π) and adding 3" or >(avg.) of overlap. Divide your answer by 12 (12"/ft.) and multiply your answer times the length of pipe to be traced then divide by the number of feet of tape per roll. AL-1 tape should be applied lengthwise directly over the cable and pressed down around the edges to improve conduction.

TAD & Associates, Inc.
P.O. Box 2170
Canyon Lake, Texas 78133

Phone: 830.964.4435
Fax: 830.964.4441
http://www.tad-associates.com

TAD & ASSOCIATES, INC. heat tracing specialists

Made in USA

ACCESSORIES

ACCESSORIES

Accessories

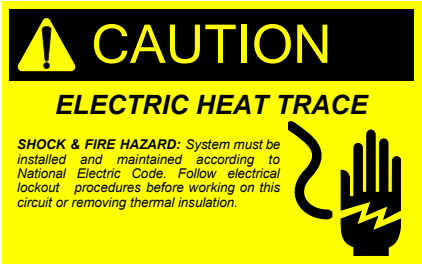

Description

CL-1 caution labels are used for identifying areas where heat trace is installed and are helpful for alerting operations personnel of potential shock hazards. CL-1 caution labels are to be affixed on insulating materials placed over heat trace. Recommended placement is between 10′ and no more than 25′ apart.

PS series pipe straps are used to secure connection kits via mounting brackets to pipes and other convenient appendages. PS series pipe straps are constructed of 201/301 stainless steel and have a 5/16" hex head for ease of installation.

The PTB power termination boot is for use with self-regulating cables only. It's an alternative to heat shrink and slides right over the conductors. The kit comes with a packet of silicone to provide a strong seal.

Ordering Information

Example Configuration	PS-1	Weight
PTB	Power Termination Boot	0.8 oz.
PS[1]	1=1"-3" Pipe Size[1]	1.2 oz.
	2=2"-14" Pipe Size[1]	2.8 oz.
	3=3/4"-1" Pipe Size[1]	0.8 oz.
CL-1	Caution Labels (5/Pack)	1.0 oz.

TAD & Associates, Inc.
P.O. Box 2170
Canyon Lake, Texas 78133

Phone: 830.964.4435
Fax: 830.964.4441
http://www.tad-associates.com

TAD & ASSOCIATES, INC. heat tracing specialists

Made in USA

EC-1/HSE-2

END TERMINATION KITS

Accessories

Actual Size

Description

The EC-1 end termination kit is used for terminating self-regulating and constant wattage heating cables. The RTV and end cap combine to form a durable, moisture resistant seal and are ideal for use in both ordinary and class 1 division 2 locations where open flames are discouraged. The EC-1 is also a great choice for low profile, under-the-insulation end seal. The end seal has a continuous exposure temperature of 500°F and can withstand intermittent excursions to 650°F making it ideal for virtually all heat tracing applications. The HSE-2 can be used with constant wattage and self-regulating cables in ordinary locations and is suitable for use in freeze protection, low process temperature & roof & gutter applications. It comes standard with a ground lug for grounding continuity. The heat shrink has an operating temperature range of –67°F to 230°F and is constructed of polyolefin with a 3:1 shrink ratio and an internal sealant to ensure a strong watertight seal.

Ordering Information

Example Configuration	**EC-1SR**	
Termination Type	Cable Type	Weight
EC-1	SR=Self-Regulating	1.0 oz.
HSE-2	CW=Constant Watt	2.0 oz.
Note: For bulk orders, one RTV packet is sufficient for three end seals. SR=16-14AWG buss wires & CW=14-12AWG buss wires.		

EC-1 Contents

- End Cap
- RTV Packet

HSE-2 Contents

- Heat Shrink Tube
- Ground Lug

TAD & Associates, Inc.
P.O. Box 2170
Canyon Lake, Texas 78133

Phone: 830.964.4435
Fax: 830.964.4441
http://www.tad-associates.com

TAD & ASSOCIATES, INC. heat tracing specialists

Made in USA

HTM

HEAT TRANSFER CEMENT

Accessories

HTM-750/1250

Maximum Exposure Temperature: ***750°F/1250°F***
Minimum Application Temperature: ***32°F***
Heat Transfer Coefficient: ***20-40 BTU/Hr-Ft²°F***
Soluble in Water: ***YES***
Shelf Life: ***1-2 Year Unopened***

HTM-NS-450

Maximum Exposure Temperature: ***450°F***
Minimum Application Temperature: ***15°F***
Heat Transfer Coefficient: ***20-40 BTU/Hr-Ft²°F***
Soluble in Water: ***NO***
Shelf Life: ***Indefinite***

Description

HTM-750/1250 heat transfer cement (mastic) is designed to significantly improve the heat transfer between tracers and process lines. Heat transfer cement thermally bonds steam and electric heat tracers to process pipes, valves, pumps and other equipment. It fills the air cavities that normally exist between the heat tracer and process equipment with heat conductive, thermal mastic that efficiently transfers heat through conduction to the process equipment. By replacing the normal air gaps with the heat conductive cement, the heat transfer rates are improved by up to 10 times that of convective heat transfer.

HTM-NS-450 is typically used with plate coil steam tracing on vessels where expansion/contraction concerns are present and also allows for ease of disassembly. It is also beneficial for transmission of cold temperatures in certain applications.

TAD & Associates, Inc.
P.O. Box 2170
Canyon Lake, Texas 78133

Phone: 830.964.4435
Fax: 830.964.4441
http://www.tad-associates.com

Ordering Information

Type	HTM-750-1	Weight (Lbs.)		
HTM-750	Container Size	**750**	**1250**	**450**
HTM-1250	1=One Gallon	15	13	12
HTM-NS-450	5=Five Gallon	75	65	60
	Q=Quart	4	3.5	3
	C=0.10 Gallon Cartridge	1.5	1.3	1.2

Accessories

CH-2	Channel for 1/2" Tracer (4' section)
CH-3	Channel for 3/4" Tracer (4' section)
CH-4	Channel for 1/4" Tracer (4' section)
SSB-1	Stainless Steel 1/2" x 0.02" Banding (823'/Roll)
SSCR-1	Stainless Crimp Seals for Banding (1,000/Box)
BT-1	Banding Tool for Stainless Steel Banding

Features

- Thermally bonds steam, fluid, and electric heat tracers to process pipes, vessels and equipment.
- With its high conductivity, significantly improves heat transfer between steam and fluid tracer tubes and process pipes.
- Provides an easy to install, cost effective alternative to jacketed piping and internal tracer systems.
- One tracer installed with HTM will deliver the equivalent heat of up to four bare (no cement) tracers. With the elimination of multiple tracers, the costs to install and maintain the tracing system is greatly reduced.
- Non-setting mastic remains pliable indefinitely and allows for easy disassembly of tracing systems.
- HTM-NS-450 requires no special curing.
- With its high conductivity, significantly improves heat transfer between steam and fluid tracer tubes and process pipes; also plate-type steam, fluid and electric heating coils installed on storage and processing tanks.

Coverage Rates

Application Method	Tracer Sizes				
	5/16" OD	**3/8" OD**	**1/2" OD**	**3/4" OD**	**1" OD**
CH-2	26'	28'	32'	NA	
CH-3	NA			19'	NA
Hand Trowel	52'	32'	28'	14'	9'
Flat Surface	1 Gallon = 6 ft.² (1/4" Thick), 12 ft.² (1/8" Thick)				

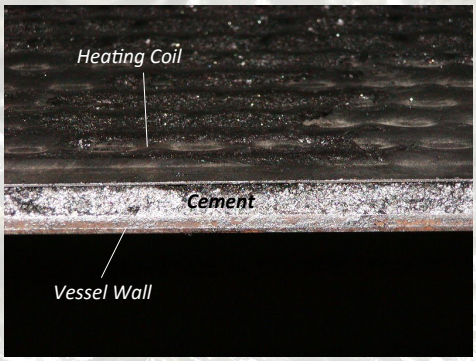

Thickness 1/4" - 1/8"

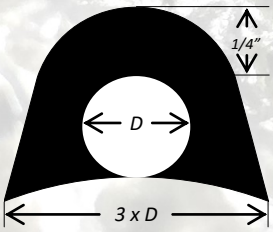

Typical hand trowel application

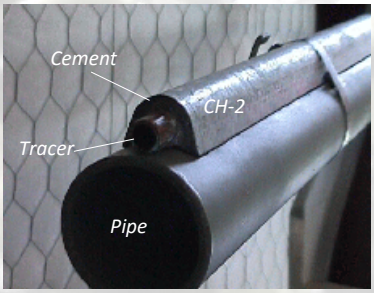

Optional channel reduces waste, weather protects and eliminates curing requirements

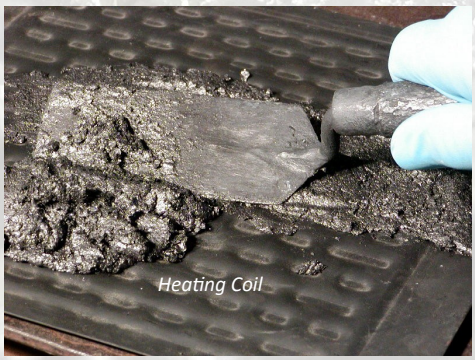

Apply evenly over coil surface area filling irregular voids

TAD & Associates, Inc. P.O. Box 2170 Canyon Lake, TX 78133 800-755-7602

TAD & ASSOCIATES, INC. heat tracing specialists

Made in USA

HTM-QT

QUICK TRACE

Accessories

Description

QuickTrace is an innovative product designed to minimize installation time and labor. It reduces waste and provides the best heat transfer cement for the operational demands. The cement is packaged in 4 Ft. flexible sections and is measured to cover the specific tracing system being installed. Both hardening and non-hardening cements are available with operating temperatures up to 1250°F. QuickTrace comes standard with a 4 Ft. galvanized metal channel that compresses and forms the cement to the tracer and pipe wall while providing mechanical and weather protection for the tracing system.

Ratings

Maximum Exposure Temperature: ***NS = 400°F; SM = 750°F; HT = 1250°F***
Minimum Application Temperature: ***10°F***
Heat Transfer Coefficient: ***20-40 BTU/Hr-Ft²°F***
Water Soluble: ***NS = No; SM & HT = Yes***
Shelf Life: ***1 Year***

TAD & Associates, Inc.
P.O. Box 2170
Canyon Lake, Texas 78133

Phone: 830.964.4435
Fax: 830.964.4441
http://www.tad-associates.com

Ordering Information

Example Configuration	HTM-QT-SM-2-1			
HTM-QT	Cement Type	Tracer Size	Channel Type	Weight
QuickTrace	NS=Non-Setting	4=1/4”	1 = Galvanized	Call
	SM=Standard Mastic	2=3/8”- 1/2”	2 = 304SS	Call
	HT=High Temperature	3=3/4”	3 = 316SS	Call
		1 = 1”		Call
Note: 1/2” channel will accommodate 3/8” tracers. Stainless channels available as an upgrade to galvanized for corrosive atmospheres. Bulk custom lengths available upon request.				

Features

- Thermally bonds steam, fluid, and electric heat tracers to process pipes, vessels and equipment.
- With its high conductivity, significantly improves heat transfer between steam and fluid tracer tubes and process pipes; also plate-type steam, fluid and electric heating coils installed on storage and processing tanks.
- Preformed, flexible heat transfer mastic provides a rapid, consistent, easy to install, cost effective alternative to jacketed piping and internal tracing systems
- One tracer installed with HTM-QT will deliver the equivalent heat of up to four bare (no HTM) tracers. With the elimination of multiple tracers, the costs to install and maintain the tracing system is greatly reduced.

Accessories

SSB-1	Stainless Steel 1/2” x 0.02” Banding (823’/Roll)
SSCR-1	Stainless Crimp Seals for Banding (1,000/Box)
BT-1	Banding Tool for Stainless Steel Banding

Channel Sizes

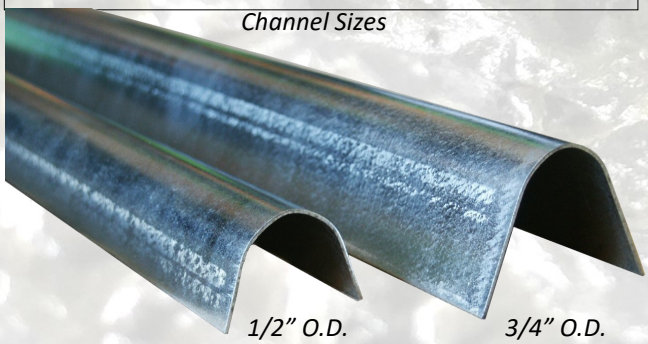

1/2” O.D. 3/4” O.D.

Note: 1/4” & 1” channels not shown.